FORMAX®

# Cut-True 33H
# Programmable Hydraulic Guillotine Cutter

6/2026

OPERATOR MANUAL

| Description | Page # |
|---|---|
| **INTENDED USE** | 5 |
| **SAFETY OVERVIEW** | 5 |
| **TRANSPORTATION AND STORAGE** | 9 |

| | |
|---|---|
| **TECHNICAL SPECIFICATIONS** | 13 |
| Electrical system | 13 |
| Hydraulic system | 13 |
| Hydraulic power pack | 13 |
| Hydraulic oil | 13 |
| External dimensions | 14 |

| | |
|---|---|
| **PREPARING FOR OPERATION** | 15 |
| Safety precautions during operation | 15 |
| Control system | 16 |
| Safety curtain LEDs | 17 |
| Electrical system | 19 |

| | |
|---|---|
| **OPERATION** | 20 |
| Safety curtain (diagnostics) after switching on power | 21 |
| Emergency stop system | 22 |
| Restarting after emergency stop | 22 |
| Back gauge positioning | 22 |
| Changing back gauge position with manual adjustment knob | 23 |
| Paper clamp | 23 |
| Manual clamping with foot pedal pre-clamp | 24 |
| Changing clamp pressure | 24 |
| LED cut line indicator | 25 |

| | |
|---|---|
| **CUTTING** | 25 |
| Air-assist table settings | 26 |
| Blade replacement | 27 |
| Blade removal | 27 |
| Installing a new blade | 33 |
| Cutting stick – rotation and replacement | 38 |
| Using the false clamp | 41 |
| Back gauge adjustments | 44 |
| Setting the cutting angle | 45 |
| Setting the back gauge angle | 49 |

| | |
|---|---|
| **SUGGESTED MAINTENANCE** | 51 |
| Daily maintenance | 51 |
| Periodic maintenance | 51 |
| Lubrication | 51 |
| Hydraulic power pack | 59 |

| | |
|---|---|
| **PERIODIC CHECKS** | 61 |
| General recommendations | 61 |
| Inspection of hydraulic hoses | 61 |
| Blade sharpness | 62 |
| Indications of a dull blade | 62 |
| Faults & identification of causes | 62 |
| Troubleshooting/technical support | 63 |

## Intended use

The Cut-True 33H is designed for cutting stacks of paper, cardboard and other materials such as plastics, fibres, metal foil, laminate, rubber, etc. to the desired size.

It is mainly used in printing houses, bookbinding plants and offices.
For some materials (e.g. plastics), a lower load height should be used.

The intended use of the device also includes following the operating instructions and observing the manufacturer's conditions for assembly, disassembly, reassembly, commissioning, inspection, checks and maintenance.

**Danger of injury due to improper use!**

- **The operator is solely responsible for injury or damage to the machine due to improper use!**
- **The machine is only intended for the applications specified by the manufacturer!**

# SAFETY OVERVIEW

Mechanical, electrical and electronic assemblies of the cutting machine have been designed and produced according to the state-of-the-art solutions and generally accepted technical principles which ensure safety in case of failure. Appropriate safeguards and protections ensure the highest level of safety for the operator.

The use of additional equipment or accessories which are not fitted, installed, supplied or produced by the manufacturer of this cutting machine requires specific permission from the manufacturer. Otherwise, the warranty becomes null and void and the manufacturer is not liable for injury or damage.

This requirement also applies to spare parts used during necessary repairs!

Repairs may only be carried out by trained technicians. If repairs are carried out by unauthorised personnel, the warranty granted for the machine becomes null and void and releases the manufacturer from liability for injury and damage.

- **The machine warranty becomes invalid if the machine is modified by the user.**

- **Modification of the machine by the user releases the supplier and manufacturer of any responsibility whatsoever.**

## Safety Symbols: Meaning and use

**Table 1. Meaning of symbols.**

| | |
|---|---|
|  | • Read the operating instructions<br>• Follow and observe the operating instructions<br>• NOTE |
|  | • WARNING<br>• Danger of damage to the machine<br>• Deterioration of the machine technical condition causing production downtime |
|  | • DANGER<br>• Danger to life<br>• Danger of injury |
|  | • High voltage! |
|  | • Children are not allowed to operate the device! |
|  | • Do not put your hands under the blade! |
|  | • Never leave the blades unattended.<br>• Do not remove or transport blades without covers!<br>• Risk of injury! |
|  | • Do not cut hard materials or materials that may chip. |

## Operator qualifications

- The cutter may only be used by qualified personnel who have **been properly trained**.
- Do not allow children to operate the cutter.

## Operator workstation requirements

### Personal protective equipment

Use the following personal protective equipment if necessary or if required by law:

- Wear protective footwear
- Wear safety glasses
  - for example, when cutting brittle material
- Use hearing protection
  - for example, when cutting hard material

### Environmental and operating conditions

- The machine may be operated in enclosed spaces
- Air humidity: 35% - 95% (non-condensing)
- Ambient air temperature: + 5°C - + 30°C

## Safety checks

To avoid any risks and hazards of using the Guillotine cutter, thoroughly read the safety and operation guidelines in this manual.

 **Danger!**

At the beginning of each work shift and after each blade replacement, check that the safety devices are functioning properly.

Tampering with, overriding or bypassing safety devices (e.g. safety curtains, two-hand controls) poses a risk of death or injury!

**The cutter should only be used by one operator at a time.**

## Safety systems

- **Two-button safety device** – cutting is activated by a two-button cutting activation system
- **Infrared Light Beam Safety Curtain –** cutter will not operate if the safety curtain is activated

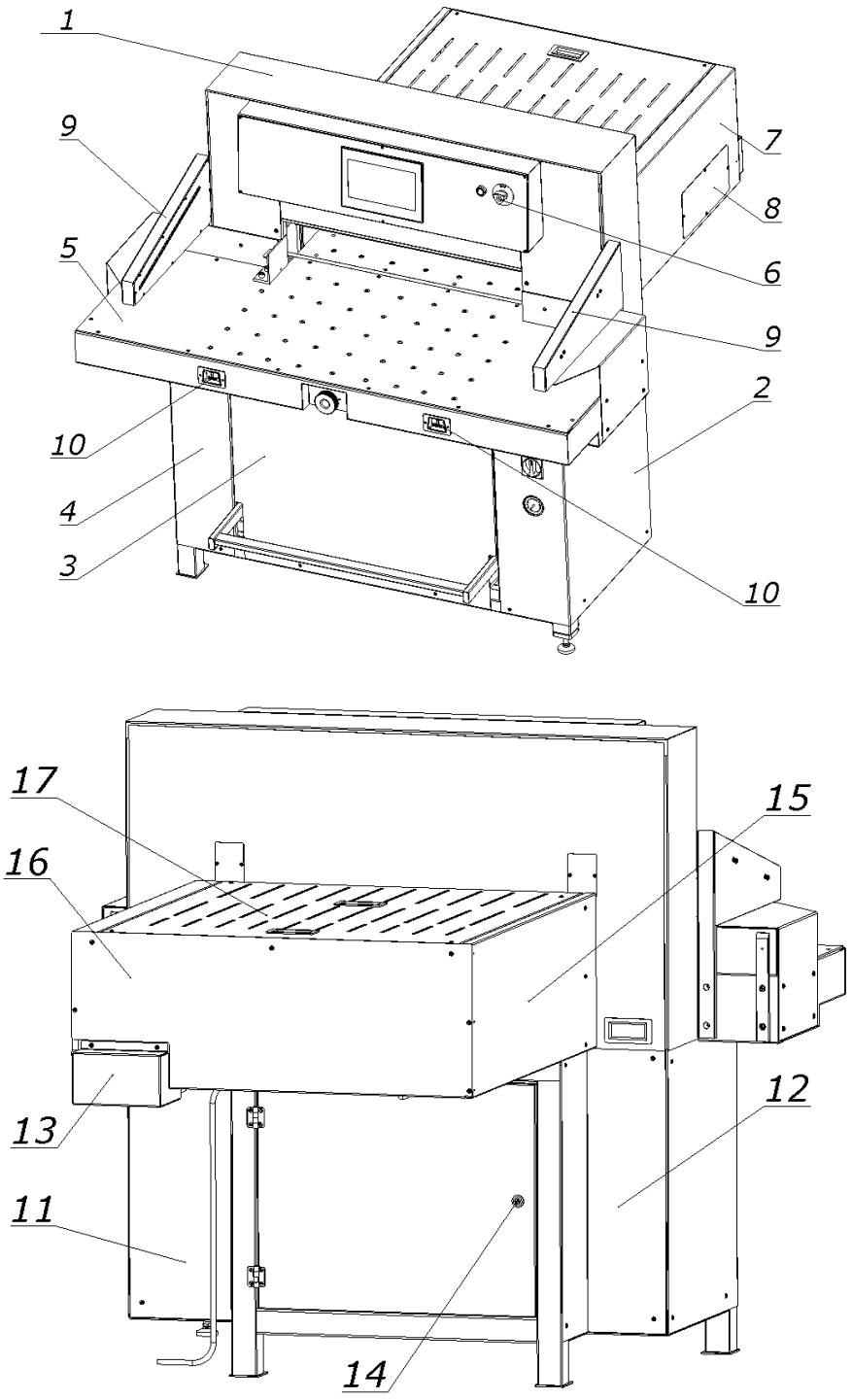


Figure 3. Arrangement of covers and protective elements

## Table 3. Safety equipment to reduce hazards (according to Figure 3)

| Potential Hazard | Safety Feature | Part Numbers on Fig. 3 |
|---|---|---|
| Lever assembly of the clamp drive mechanism | Fixed cover | 1, 2, 3, 4, 11, 12 |
| Hydraulic system | Fixed cover<br>Front table | 2, 3, 4, 11, 12<br>5 |
| Belt transmission of the back gauge drive system | Cover | 13 |
| Screw mechanism of the back gauge drive | Fixed cover | 7, 8 |
| Lever assembly of the knife drive mechanism | Fixed cover<br>Front table | 1, 2, 4, 11, 12<br>5 |
| Knife bar (blade) approaching movement | Fixed cover<br>Safety curtain<br>Two-hand control buttons | 1<br>9<br>10 |
| Pressure movement of the paper clamp | Fixed cover<br>Safety curtain<br>Two-hand control buttons | 1<br>9<br>10 |
| Movement of the back gauge | Fixed cover | 7, 15, 16, 17 |
| Handling the knife during blade replacement | Blade change safety tool<br>Special protective packaging | Not shown<br>Not shown |

**ELECTRICAL**

| | | |
|---|---|---|
| Direct contact with active live elements | Enclosure<br>Partially reduced supply voltage of the control system to 24V AC and DC | 14 |
| Indirect contact | Protection against indirect contact according to PN-EN 60204-1<br>Continuity of the protective conductor | |

## Safety inspections

Periodic safety inspections should be carried out in accordance with legal regulations. These regulations relate to:

- accident prevention
- ensuring efficient operation and precision
- eliminating production downtime.



**NOTE**

**After 5 years of use at the latest, at least the following functions must be checked and the results documented:**

- operation of the control functions
- checking the correct position of the knife
- checking the power supply to the cutting machine's linear indicator
- operation of the safety curtain
- operation of the two-hand control function
- operation of the knife continuous movement safety device.

**The above service should be commissioned to the technical service department of the cutting machine manufacturer.**

# TRANSPORT AND STORAGE

## Packaging

The transport packaging used is disposable.
The transport platform is made of wood and the outer packaging is made of cardboard. Inside the case, the cutting machine and accessories are packed in anti-corrosion plastic covers and oiled paper.

### Packaging disposal

Used packaging should be disposed of in accordance with local regulations.

## Transport

The machine case must be transported in accordance with the markings placed on the machine (Fig. 4). When using a forklift truck (Fig. 5a), ensure that the length of the forks is sufficient to be carry the case at its entire depth.

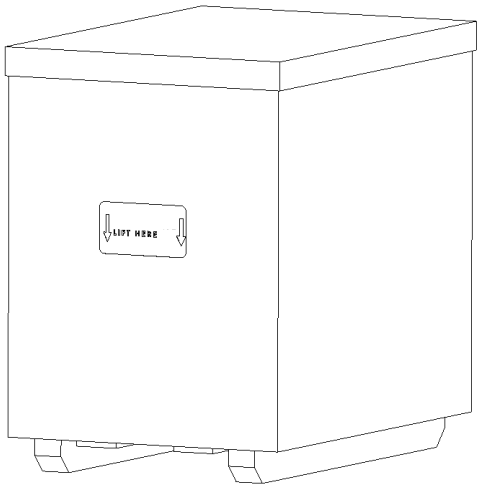


Figure. 4 Cutting machine in the transport case.

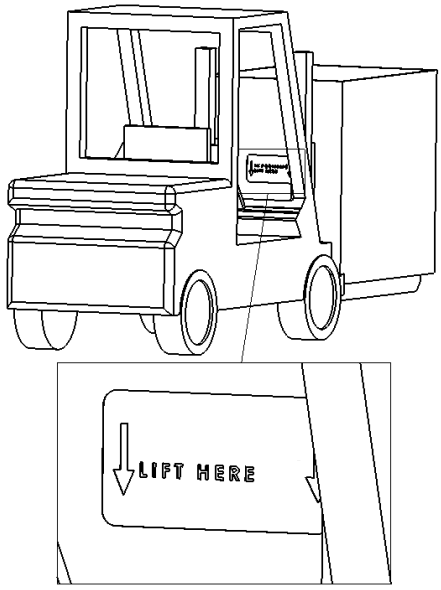


Figure 5a. Transportation of the cutting machine in a case using a forklift truck.

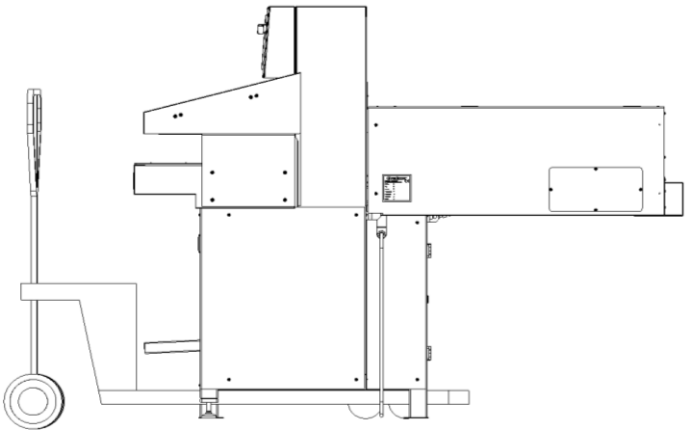

Figure 5b. Transport of the cutting machine by pallet truck.

## Delivery condition

The cutter is delivered fully assembled.

## Positioning the cutter

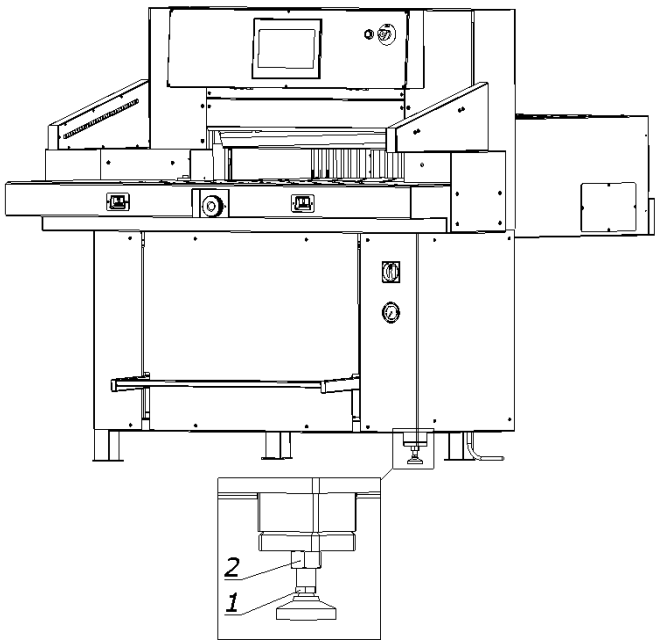


Figure 7. Adjusting the the leveling foot.

The cutter does not need to be fixed to the ground. It can be positioned correctly and securely by turning the adjustment levelling foot (1) and locking it in place with nut (2),

as shown in Figure 7.

## Work area

For easy access to the cutting machine's mechanisms during adjustment, maintenance or servicing operations, it is recommended to maintain a free space of not less than approx. 0.5 m / 20 inches around the unit (Fig. 8).

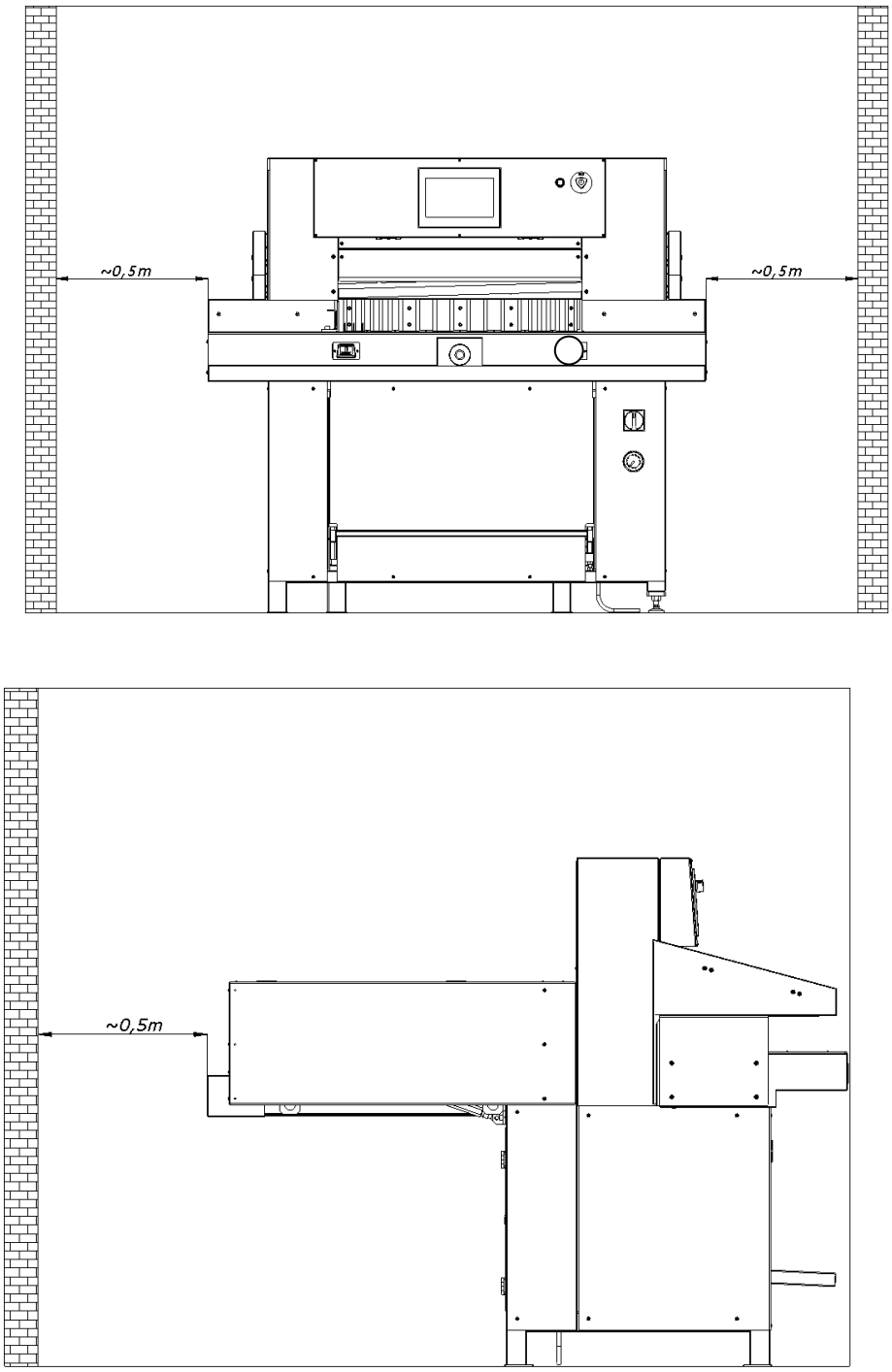


Figure 8

# SPECIFICATIONS

| **Specifications** | | |
|---|---|---|
| Maximum cutting width | | **31.5” (800mm)** |
| Maximum stack height | without false clamp | **4” (102mm)** |
| | with false clamp | **3.7” (96mm)** |
| Table length behind blade | | **31.5” (800mm)** |
| Table length in front of blade | | **25.6” (650mm)** |
| Minimum cutting length | without false clamp | **.98” (25mm)** |
| | with false clamp | **1.97” (50mm)** |
| Table size | | **64.25” W x 25.6” D**<br>**(1632 x 650mm)** |
| Weight | | **1,874 lbs (850kg)** |

## Electrical system

| **Specifications** | |
|---|---|
| Maximum power (kW) | **4.2** |
| Voltage/frequency (V/Hz) | **3x400/50 - 60**<br>**3x220/60** |
| Protection (A) | **3x20**<br>**3x30** |

## Hydraulic system

### Hydraulic power pack

| **Specifications** | |
|---|---|
| Engine power (kW) | **3.0** |
| Voltage/frequency (V/Hz) | **3x400/50**<br>**3x220/60** |
| Control of actuators (VDC) | **24** |
| Tank capacity (l) | **30** |

**Hydraulic oil**

| **Specifications** | |
|---|---|
| Oil type | **HV 46** |
| Quality | **ISO 11158 - HV** |
| Viscosity: | **ISO VG 46** |
| DIN standard | **51524, 46 mm2 (cST).** |
| Kinematic viscosity at temp. (40°C) | **47.2 mm²** |

The hydraulic system does not require bleeding; this occurs automatically after a few cuts.

## External dimensions

The dimensions of the cutter are shown in Figure 9 and Table 6.

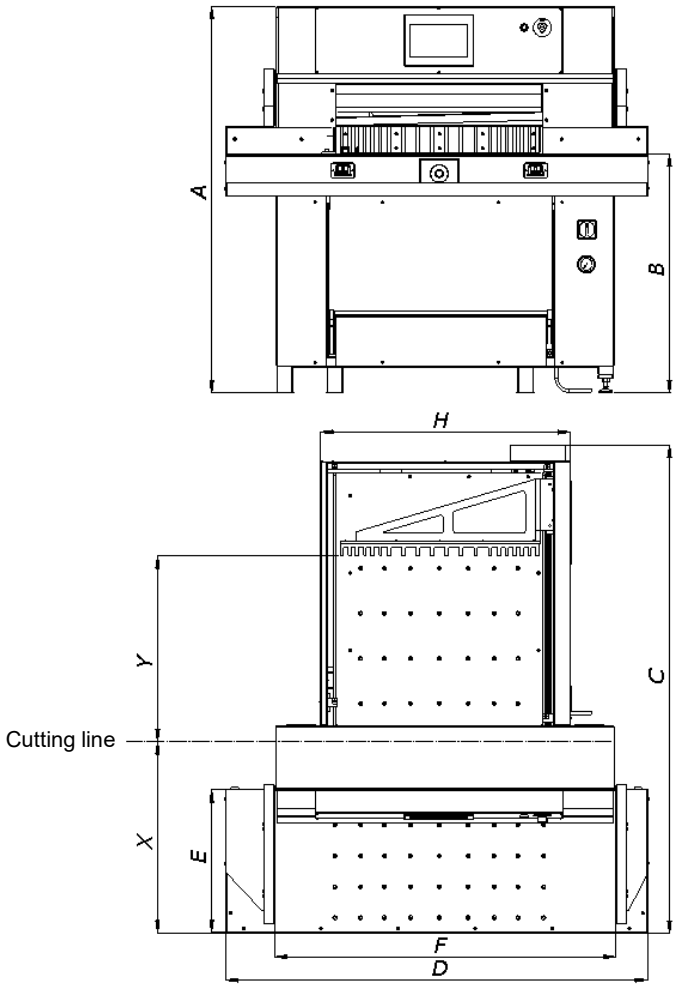


Figure 9. External dimensions of the cutting machine.

### External Dimensions

| DIMENSION | VALUE (inches) |
|---|---|
| A | 59 |
| B | 36.6 |
| C | 74.6 |
| D | 64.7 |
| E | 21.6 |
| F | 52.2 |
| H | 38.3 |
| X | 25.6 |
| Y | 31.8 |

# OPERATION

## Safety precautions during operation

- Before each start-up or before the next shift begins works on the cutting machine, check that the safety components are complete and functioning correctly.
- The cutting machine may only be operated when all safety and protective elements, such as removable covers and emergency stop switches, are installed and fully functional.
- In the event of a malfunction, stop and lock the cutting machine immediately.
- Any faults must be repaired immediately.

Refrain from any activity that compromises safety on the machine.
In particular, DO NOT:

- Place hands in the working area of the knife and pressure plate.
- Place hands in the area between the paper clamp and the back gauge.
- Exercise extreme caution when handling the knife! Use the transport handles when installing/removing/moving the knife.
- Use only undamaged and sharp knives!
- The knife may only be replaced by previously trained personnel.
- No objects (such as keys, screwdrivers) may be left on the work table during cutting.

## Control system

**Danger!**

**The cutting machine must not be operated with a faulty safety curtain!**

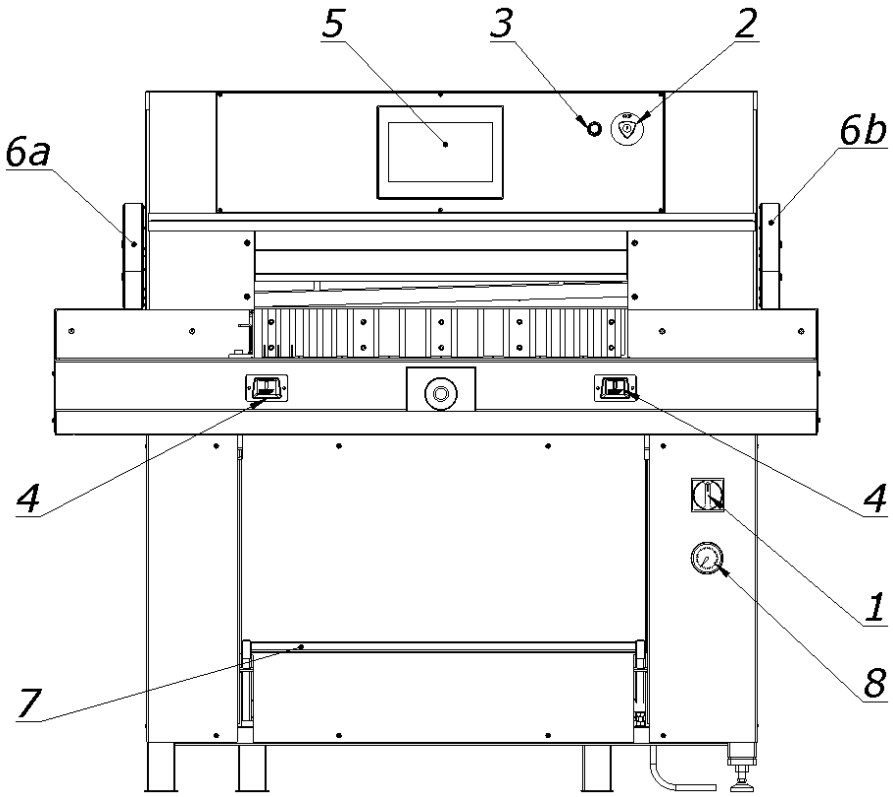


Figure 10. Control and signalling elements

1. Main power switch
2. Emergency stop button
3. Control system activation button
4. Two-hand operation buttons
5. Touchscreen control panel
6. Infrared safety curtain

6a. Safety curtain transmitter

6b. Safety curtain Receiver

7. Foot pedal pre-clamp
8. Pressure gauge

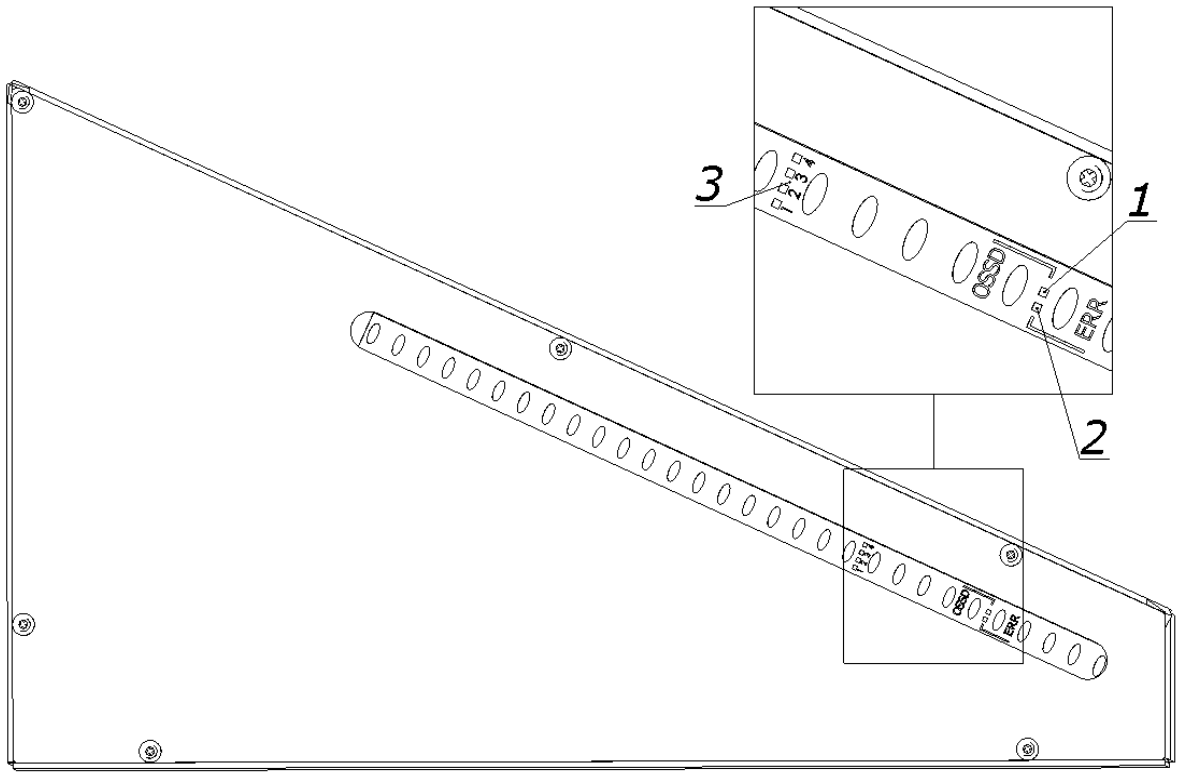


Figure 11. Safety curtain receiver indicators

The receiver is equipped with six LEDs to indicate operating status:

| Item | LED color | Indication | Message |
|---|---|---|---|
| 1 | red/green | OSSD status | OSSD |
| 2 | red | Error signalling | ERR |
| 3 | blue | Setting quality | 1 2 3 4 |

Blue LEDs indicating the quality of the setting, combined with a flashing red ERR LED, also signal errors.

## Safety Curtain LED indicators

| LEDs status | OSSD LED | Meaning |
|---|---|---|
| No LED illuminated | red | The alignment is insufficient or the protective field is interrupted at least in part. The receiver cannot synchronise with the transmitter. |
| 1 LED illuminated | red | The alignment is insufficient or the protective field is interrupted at least in part. |
| 2 LEDs on | red | The alignment is insufficient or the protective field is interrupted at least in part. |
| 2 LEDs on | green | The alignment is not yet sufficient to ensure stable availability. |
| 3 LEDs on | green | The alignment is good, stable availability. |
| 4 LEDs on | green | The alignment is very good. |

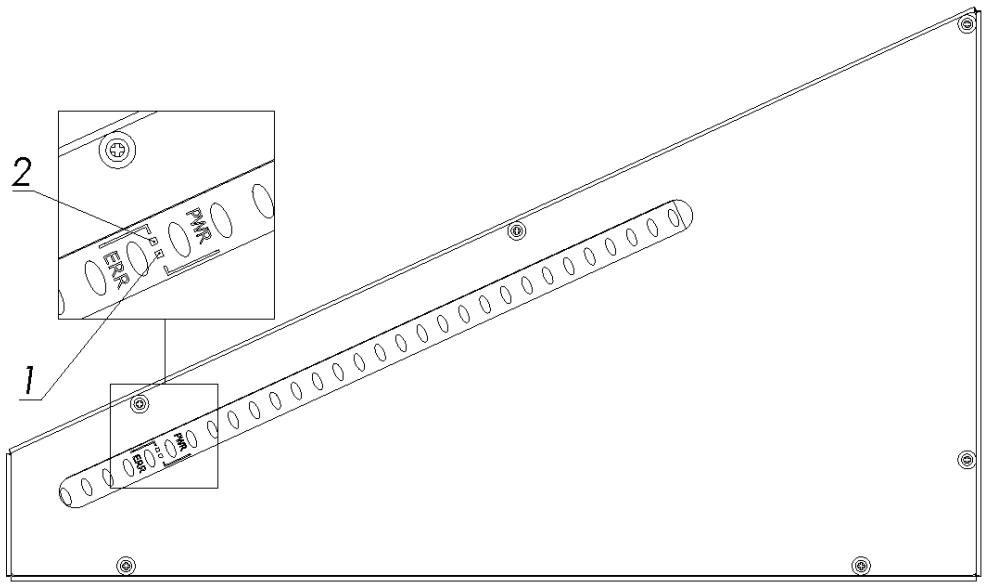


Figure 12. Safety curtain transmitter indicators

The transmitter has with two LEDs to indicate the operating status (see table below)

| Item | LED color | Indication | Message |
|---|---|---|---|
| 1 | yellow | Operating status indicator | PWR |
| 2 | red | Error signalling | ERR |

## Electrical system

The Cut-True 33H is supplied with a five-core copper cable with a cross-section of 2.5 mm². The user is responsible for connecting the cutting machine to the electrical network with 20A protection. Use a copper cable with a cross-section of at least 2.5 mm² for connection. Power supply voltage fluctuations should be within the range of 90-110% of the rated voltage, and frequency fluctuations within the range of 50 Hz ± 2%.

The cutting machine can be connected to a five-wire electrical network L1, L2, L3, N, PE.



**Danger!**



**High voltage!**

**Before opening the housing, turn off the main switch!**

1. Door of the electrical equipment box (Fig. 13)
2. Key to the electrical equipment box (Fig. 13)

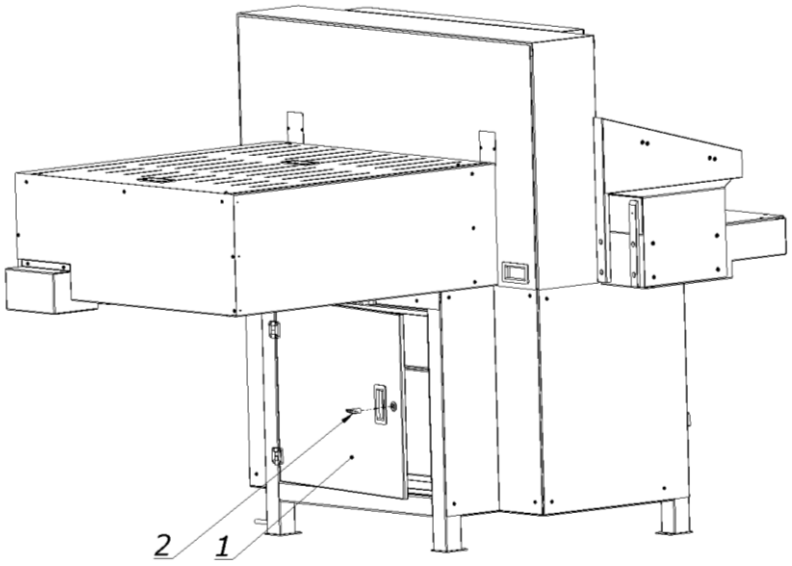


Figure 13. Location of electrical equipment.

# OPERATION

## Turning on the cutter

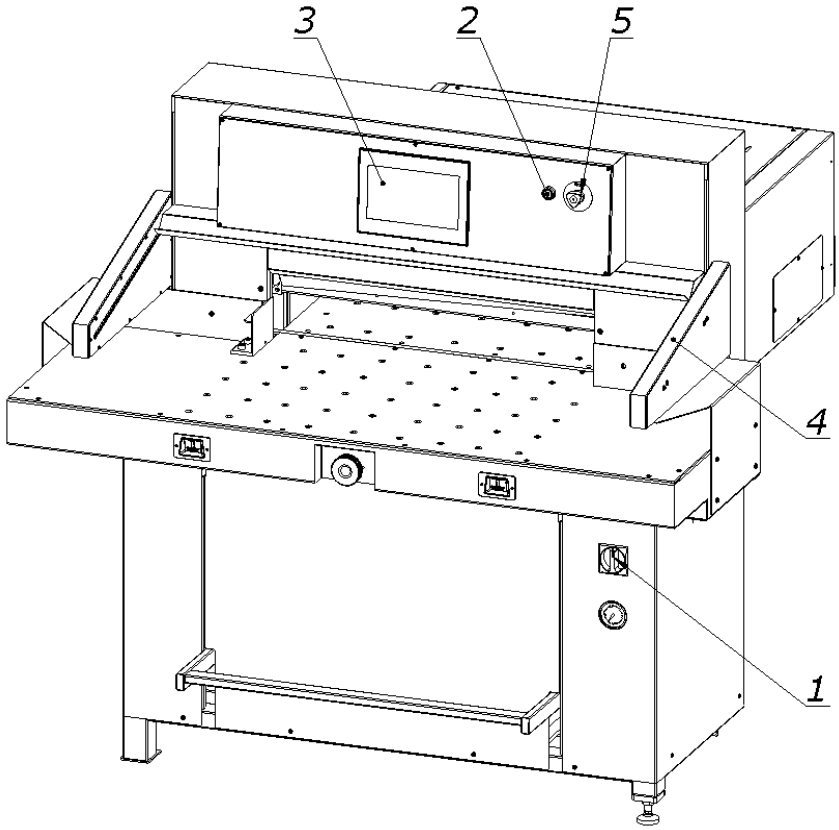


Figure 15. Arrangement of components used when switching on the cutting machine.

1. Set the main switch to the ‘ON’ position (1)
2. Press green button (2)
    - Touchscreen (3) lights up green
    - OSSD 1 LED (Fig. 11) lights up green in receiver 4 (Fig. 15)

**NOTE**

**If, after switching on the power supply with main switch 1 (Fig. 15) and pressing green button 2, LED 3 lights up green, the connection is correct (correct direction of motor rotation); if the LED lights up red, the connection is incorrect and two of the three phase wires in the plug must be swapped.**

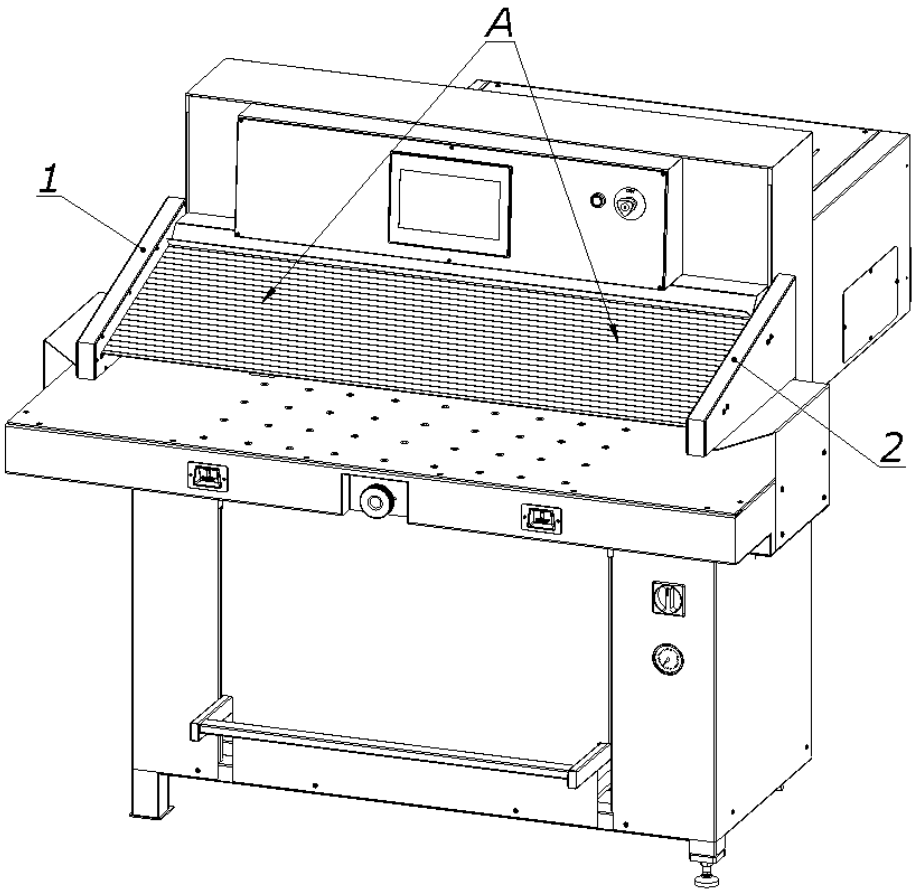


Figure 16. Safety curtain.

1. Transmitter
2. Receiver
A - light curtain working area

## Light curtain indication (diagnostics) after switching on the power supply.

When the cutting machine is switched on, transmitter 1 and receiver 2 are initialised (Fig. 16).
All LEDs on the transmitter and receiver will light up briefly. After initialisation, the receiver indicates the quality of the setting with four blue LEDs 3 (Fig. 11).
The setting indicator goes out after a certain time when the safety curtain is set (LED of the output signal switching device: green pos. 1 Fig. 11) and only the PWR LED of transmitter 1 (Fig. 12) and LED 1 (Fig. 11) of the receiver output signal switching device light up.
In the event of an error on a given device, a red LED will light up. On the receiver side, the red error LED – in combination with the blue LEDs – indicates the cause of the error.



**Danger!**

**In the event of malfunctioning photocells, contact the service department immediately!**

### Emergency stop

1. Press button 5 (Fig. 15)

The switch is used for emergency stopping.

When pressed, the message ‘Switch off safety button’ will appear on the screen.

The paper clamp and knife will stop.

### Starting the cutter after an emergency stop

1. Unlock button 5 (turn it with key) (Fig. 15)
2. Press green button 2

If the stop was performed during the cutting cycle, pressing the cutting buttons again will return the paper clamp and knife to their upper position.

## Back gauge positioning



**Danger!**



**Do not put your hands in the cutting area while the feed is in progress!**

The position of the back gauge is set using programmer 1 and manual knob 2, Figure 17.



**NOTE**

**The method of determining the position of the back gauge and the operation of the programmer are described in the *Cut-True 33H Programming Manual*.**

## Changing the position of the back gauge with the manual knob

1. Touchscreen monitor

2. Knob

- turn clockwise – the back gauge moves closer
- turn anticlockwise – the back gauge moves further away
- a slight turn of the knob causes slow movement (position I)
- turning to the stop causes fast movement (position II)

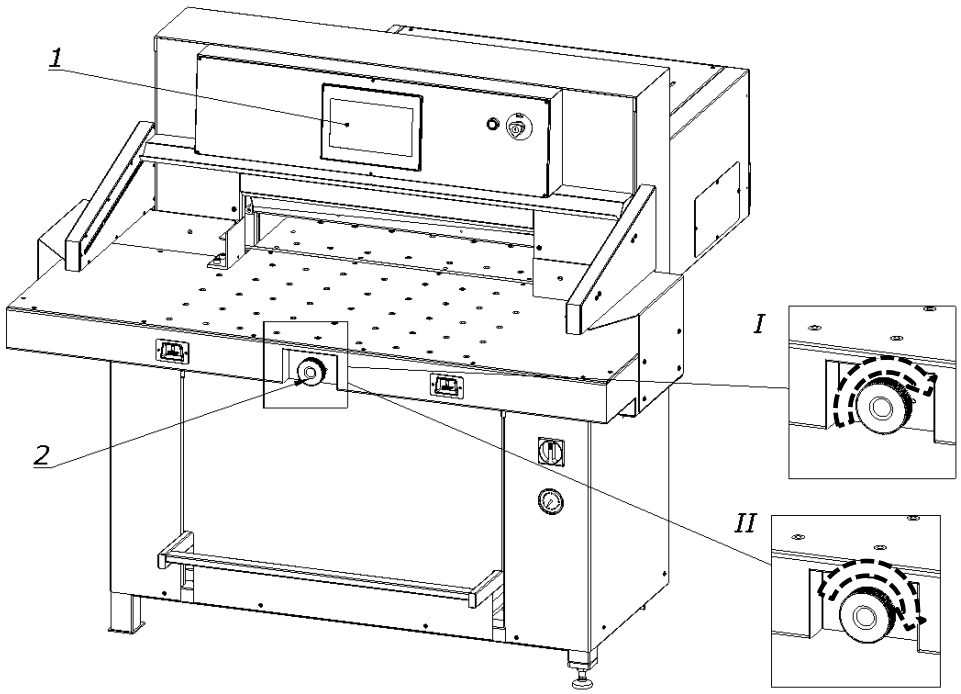


Figure 17. Arrangement of the positioning elements of the back gauge.

## Clamping paper

The cut material is clamped automatically after pressing the buttons that start cutting cycle 1 (Fig. 18).



**Danger!**



**Do not put your hands in the cutting area while clamping is in progress!**

## Using the foot pedal pre-clamp to determine the cutting line

Lower the paper clamp onto the stack by pressing foot pedal pre-clamp 2 (Fig. 18) The front edge of the paper clamp is identical to the cutting line. Therefore, it can be used as a cutting line indicator.

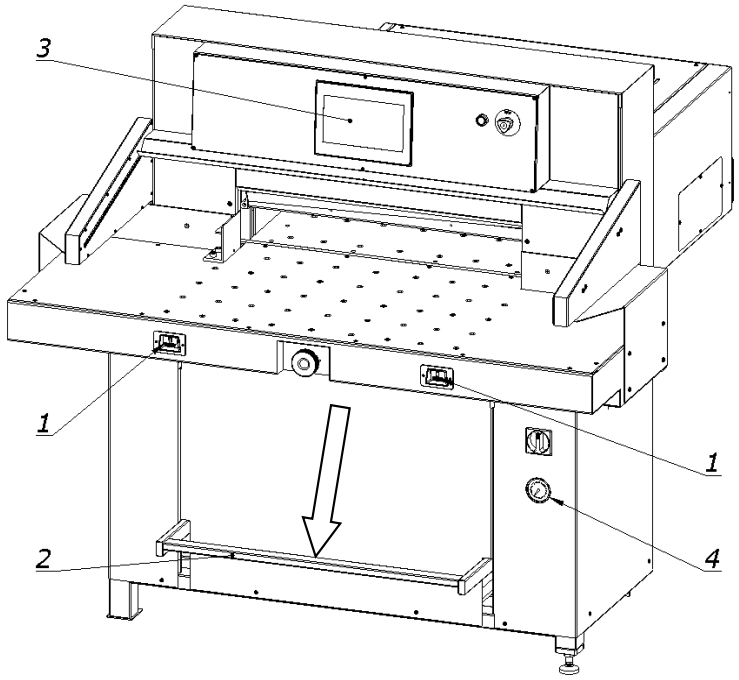


Figure 18. Operating elements when used during clamping.

## Changing clamp pressure

The pressure force can be changed on touchscreen 3 by reading the pressure value on pressure gauge 4 (Fig. 18).

The range of pressure force changes is expressed as a percentage of the pressure value in the hydraulic system, where:

- **0% is 25 bar, which corresponds to a force of 300 daN**
- **100% is 110 bar, which corresponds to a force of 2000 daN**

### Rules for selecting the pressure force

The pressure force value is selected experimentally, depending on the type, width and height of the material being cut.

The following rules should be observed:

- the higher the stack, the greater the pressure force
- the greater the cutting width, the greater the pressure force
- the harder the material, the greater the pressure force.

## LED cut line indicator

The cutting machine is equipped with an LED cutting line indicator. A thin line of light indicates the cutting line on the material being cut.

The cutting line indicator can be turned off/on via the touchscreen 3 (Fig. 18).

## Cutting (clamping and cutting)



**Danger!**



**Do not put your hands in the cutting area!**

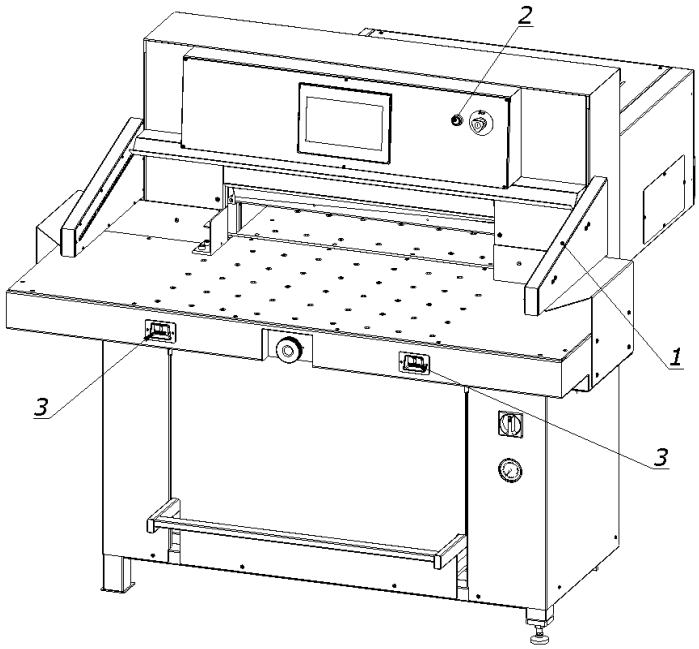


Fig. 19 Control and signalling elements used during cutting.

Cutting can be performed if:

1. there are no objects in the light barrier's working area – the green OSSD 1 LED (Fig. 11) on receiver 1 (Fig. 19) is lit.
2. the green push button 2 is pressed.
3. buttons 3 are pressed simultaneously.

Both buttons 3 must be pressed until the material is cut.

The knife returns and stops in the upper return position, and the clamp bar moves upwards automatically.

Releasing buttons 3 while the clamp bar and knife are moving downwards will interrupt this movement. If an object enters the light barrier's working area during cutting, the downward movement of the clamp bar and knife will be interrupted. To continue cutting, remove the object and press both buttons 3 simultaneously again.

**Paper clips or other hard objects may damage the blade.**

## Air table settings

The feed table is equipped with air-assist nozzles 1 (Fig. 20).

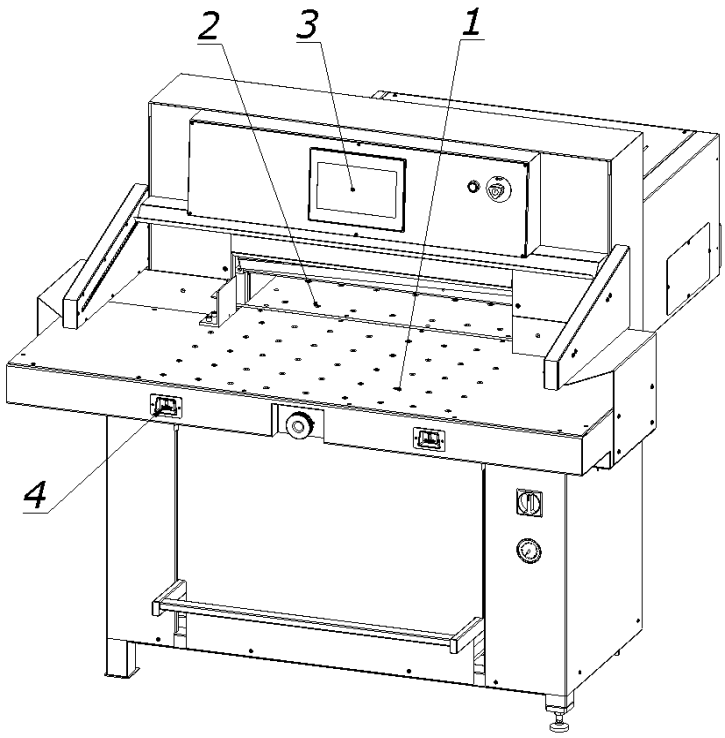


Figure 20.

To turn on the air supply from the valves on the front and rear tables 1 and 2, press the blower button  on the touch screen 3 or press button 4 twice (Fig. 20). To turn off the air supply, press the blower button on the touchscreen again or press button 4 twice.

Once the air supply is turned on, it becomes easier to move the stack.

During the cutting, clamping or manual clamping with the foot pedal cycle, the air supply is automatically turned off.

## Blade replacement

The manufacturer recommends replacing the blade with a sharp one after approximately 8 hours of effective work.



**Danger!**



**Risk of injury!**

- **Risk of injury to the operator and support personnel**
- **Risk of injury to hands and arms in the knife area due to cutting**
- **The blade edge is sharp – do not touch**
- **Do not attempt to remove the blade without the changing tool**
- **The knife may only be replaced if the replacement tools are not damaged**
- **Dull blades must be placed in the cassettes immediately**
- **Blades intended for scrapping must be deliberately blunted**

## Blade removal

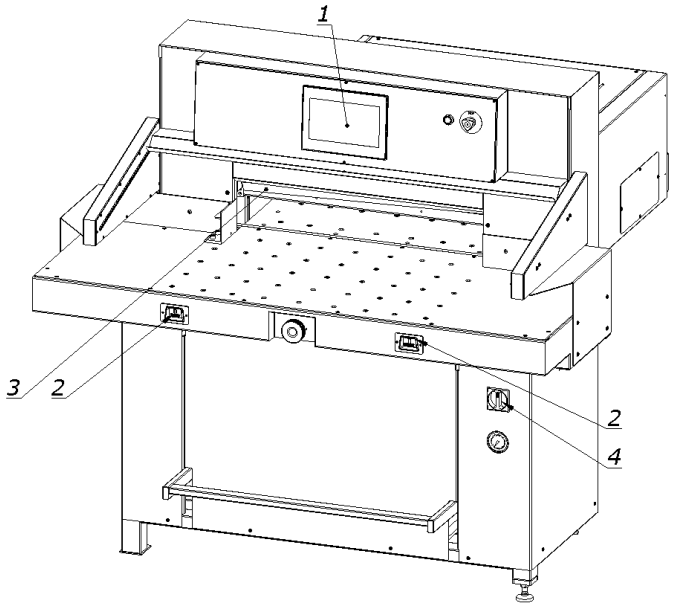


Figure 21.

1. Select the “Knife replacement” function on screen 1 of the touchscreen (Fig. 21) (*“Programming Manual”*). 

2. Press cutting buttons 2  simultaneously (Fig. 21) to start the cutting cycle. Knife 3 will stop in the lower position.

3. Flip up knife cover 1 to open (Fig. 22).

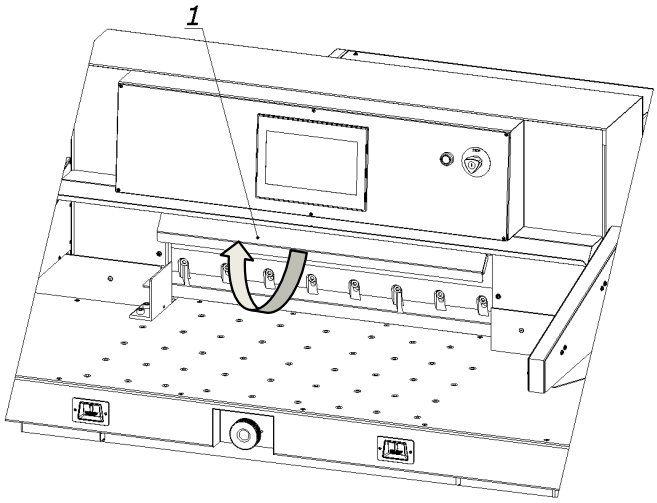


Figure 22.

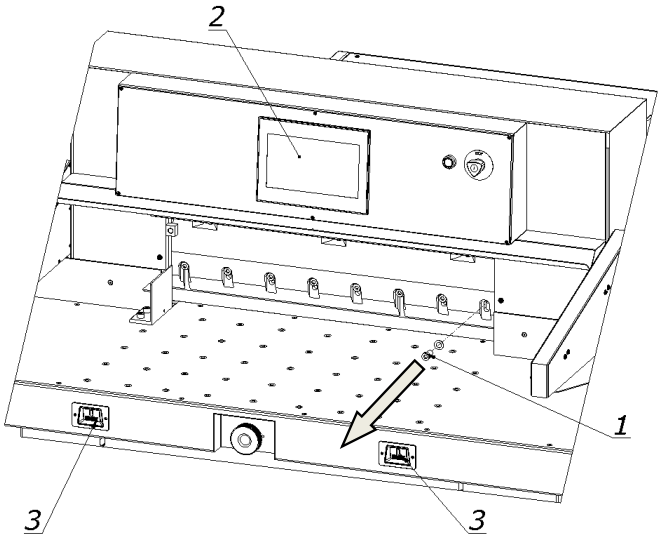


Figure 23.

4. Unscrew and remove the first fixing screw 1 on the right side of the knife bar (Figure 23).

5. Close the knife cover 1 (Fig. 24).

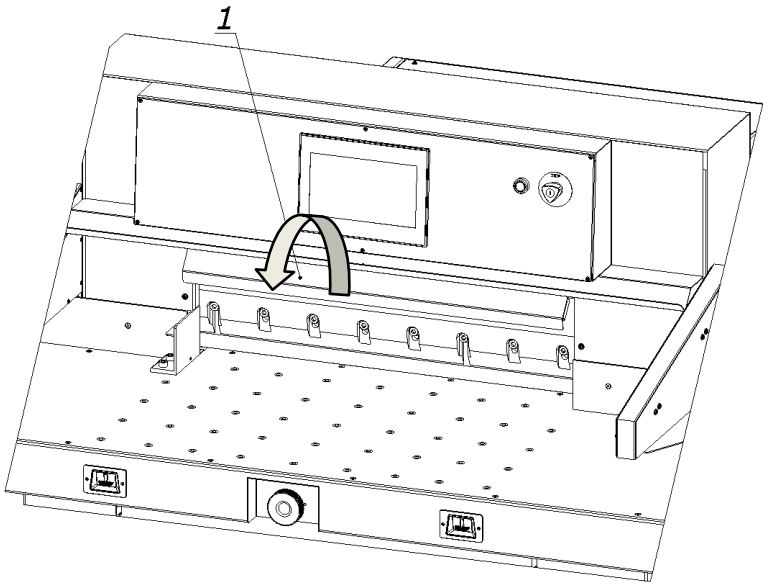


Fig. 24.

6. On the touchscreen 2 (Fig. 23), disable the “Knife replacement” function.

7. Press the push buttons 3 simultaneously. The knife will return to its upper position.

8. Open the knife cover 1 (Fig. 22).

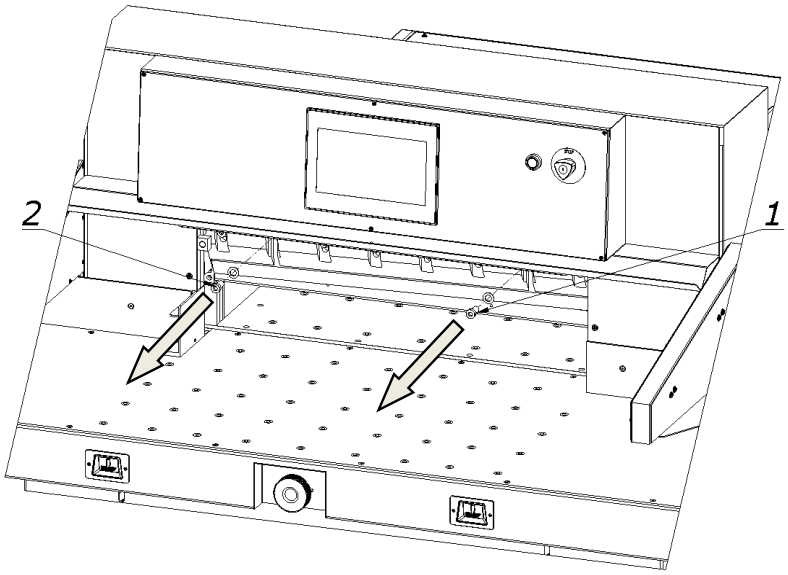


Figure 25.

9. Unscrew and remove fixing screws 1 and 2 (Fig. 25).

10. Screw in blade change safety tool 1 (Fig. 26) in place of the removed screws 1 and 2 (Fig. 25) so that it secures the knife to the knife bar (Fig. 27).

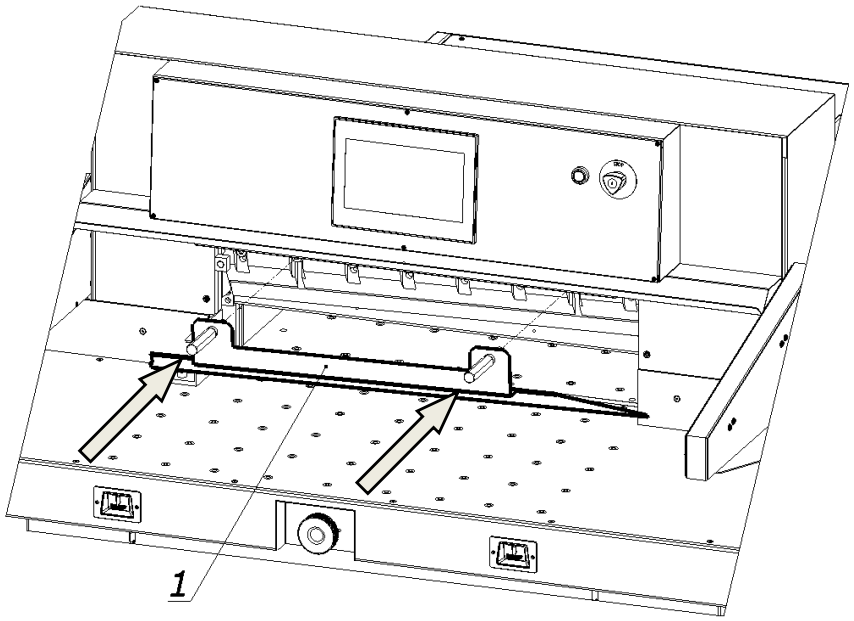


Figure 26.

11. Unscrew and remove screws 2 together with washers 3 (Fig. 27).

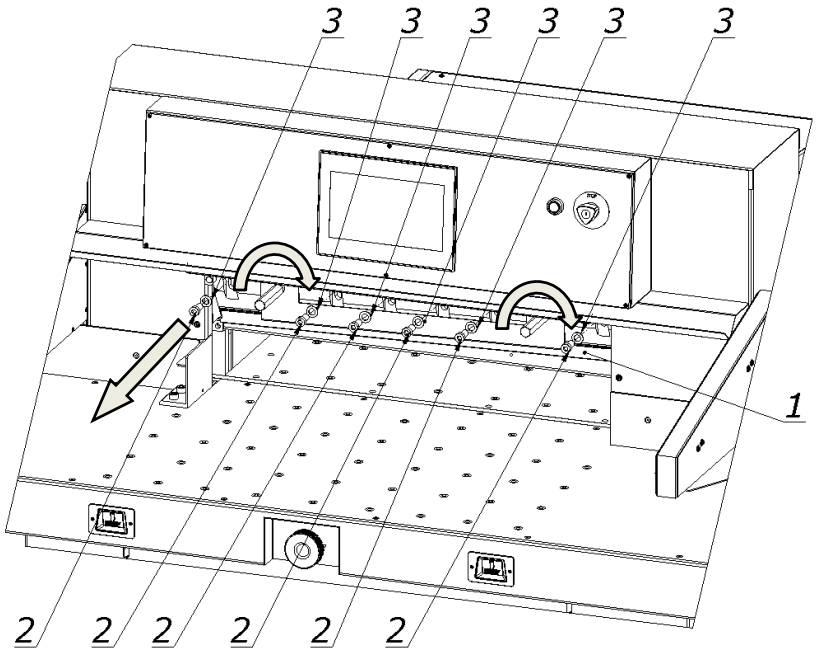


Figure 27.

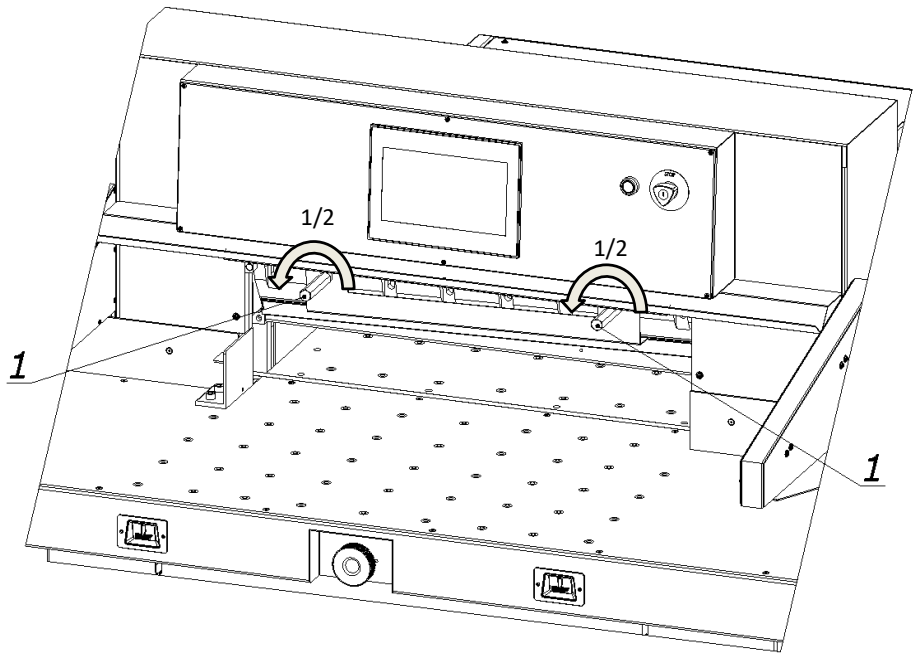


Figure 28.

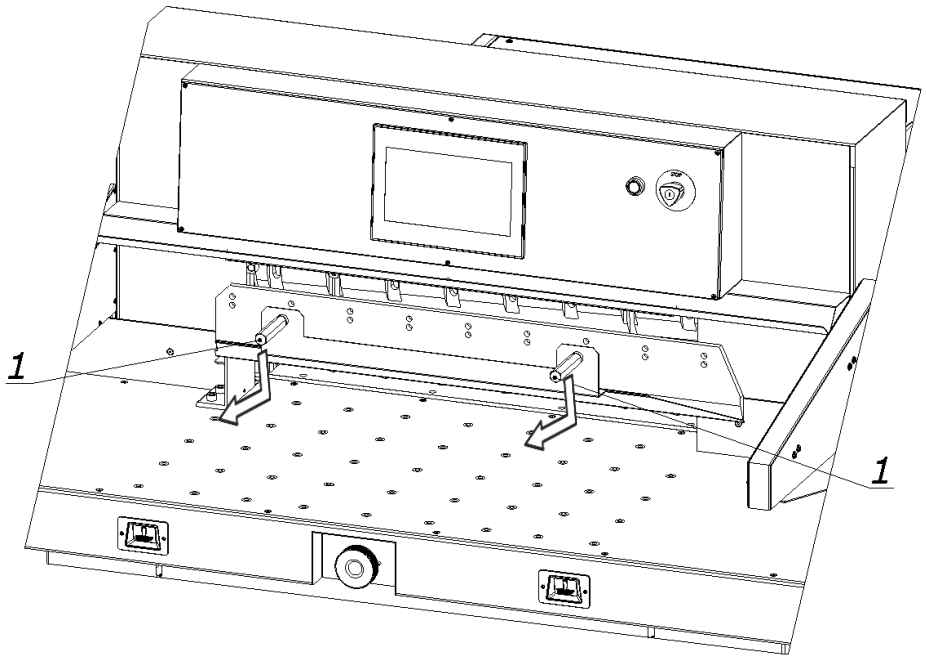


Figure 29.

12. Holding the transport handles 1, release from the clamp by turning them 1/2 turn to the left simultaneously (Fig. 28) and carefully slide the blade downwards (Fig. 29). Place the removed blade in a special protective packaging (Fig. 30a – 30d) with the blade facing inwards and secure it with two screws. Use the RWTg 8 pin key supplied with the cutter to unscrew the screws securing and fixing the blade to the blade change safety tool.

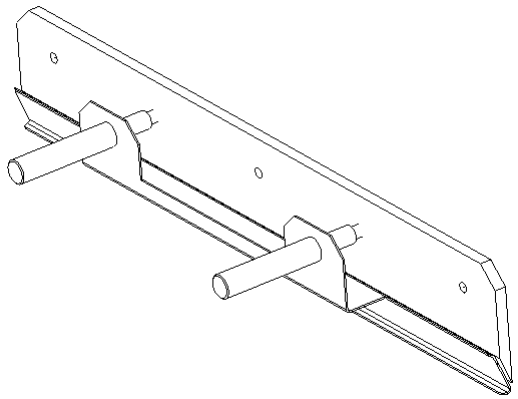

Figure  30a. Blade in the blade change safety tool.

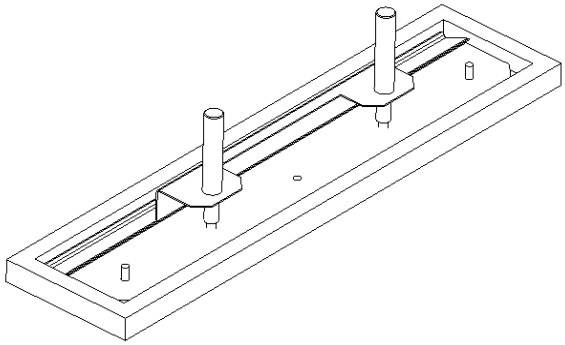

Figure 30b. Blade in the packaging.

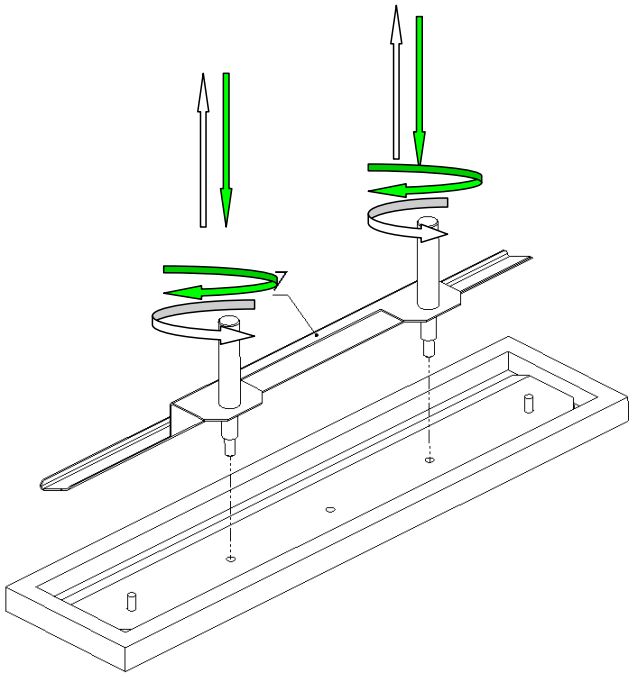

Figure 30c. Unscrewing/screwing the transport handles.

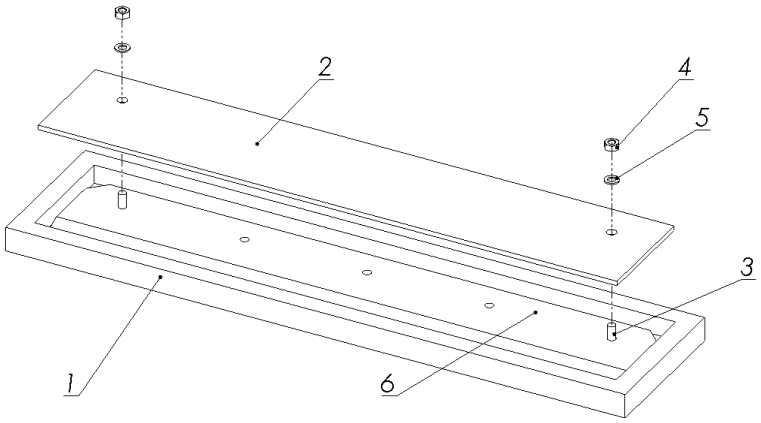


Figure 30d. Blade attachment in packaging

1. Packaging
2. Cover
3. Screw
4. Nut
5. Washer
6. Knife
7. Knife replacement handle

## Installing the new blade

1. Remove adjustment screws 1 (Figure 31) so that their heads are hidden in the knife bar body.

Figure 31 B – the adjustment screw does not protrude below projection 2 in the knife bar – **correct position**.

Figure 31 A – the adjustment screw protrudes below projection 2 in the knife bar – **incorrect position**, unscrew the screw.

**WARNING**
**The knife must be able to rest with its upper surface against the protrusion of the knife bar. Failure to comply with this condition may result in serious overload or even damage to the machine if the knife being installed is higher than the one being removed.**

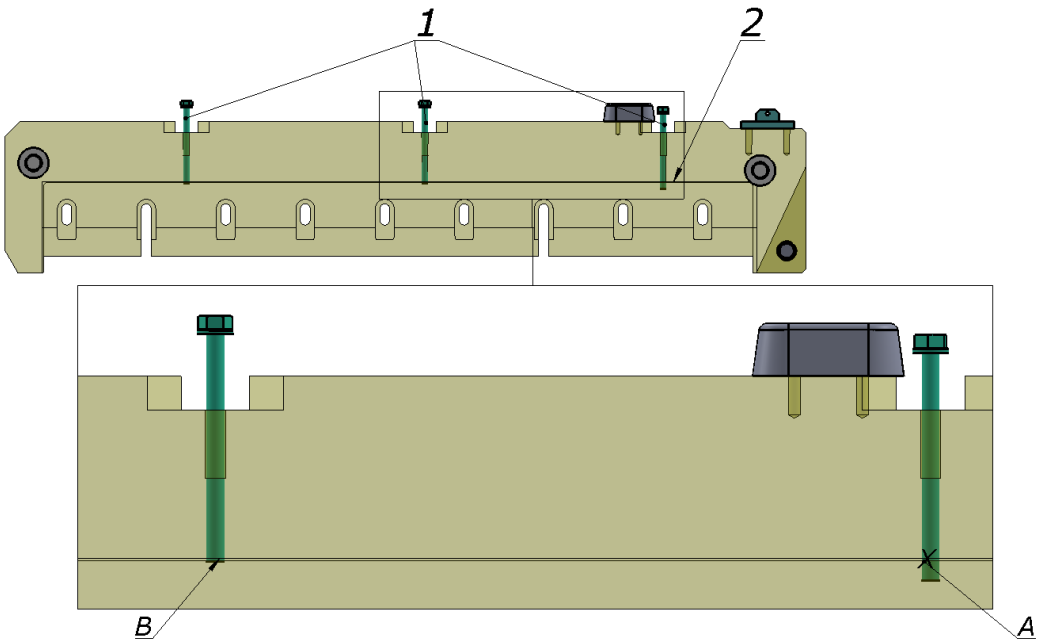


Figure 31. Position of adjustment screws.

2. Remove the knife from its packaging (Fig. 30a - 30d).
3. Holding transport handles 1, insert knife 2 into the cutting machine so that the transport handles screwed into the knife fit into the cut-outs in knife bar 3. (Fig. 31).

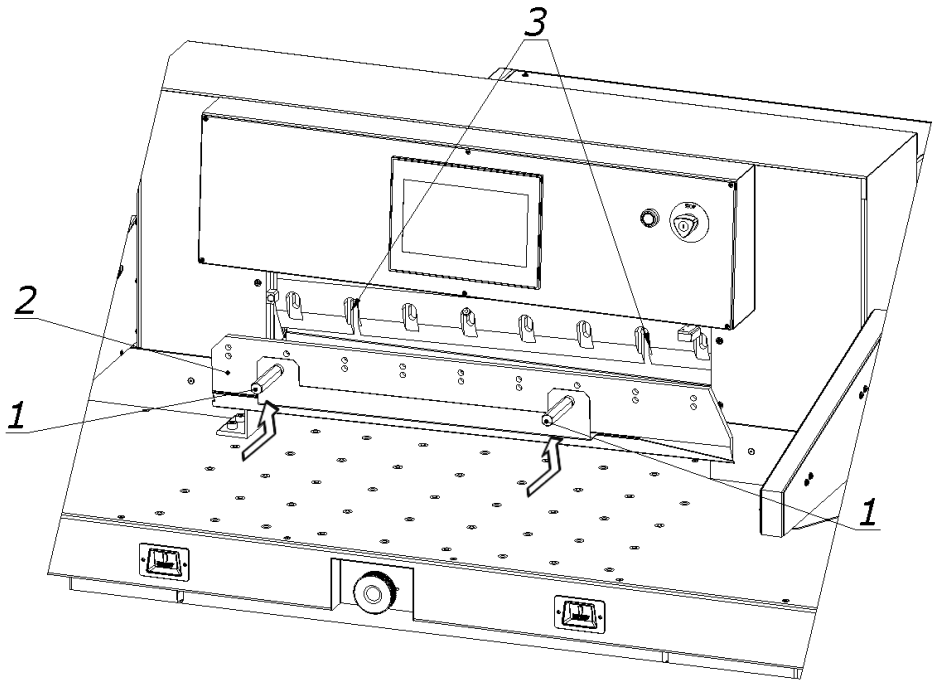


Figure 32.

4. Insert the knife until its upper surface rests against the protrusion in knife bar 2 (Fig. 31).

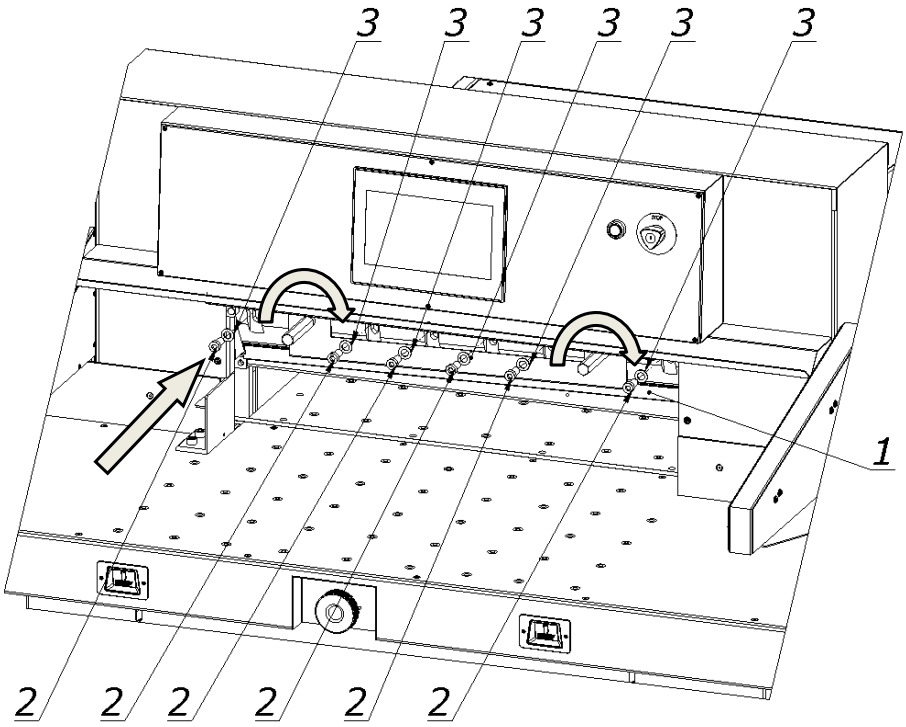


Figure 33.

5. Pre-attach the knife to the knife bar by turning both transport handles 1 firmly to the right (Fig. 33).

6. Screw in fixing screws 2 together with washers 3 (Fig. 33).

7. Remove both transport handles 1 (Fig. 34) and screw in fixing screws 1 and 2 (Fig. 34) in their place.

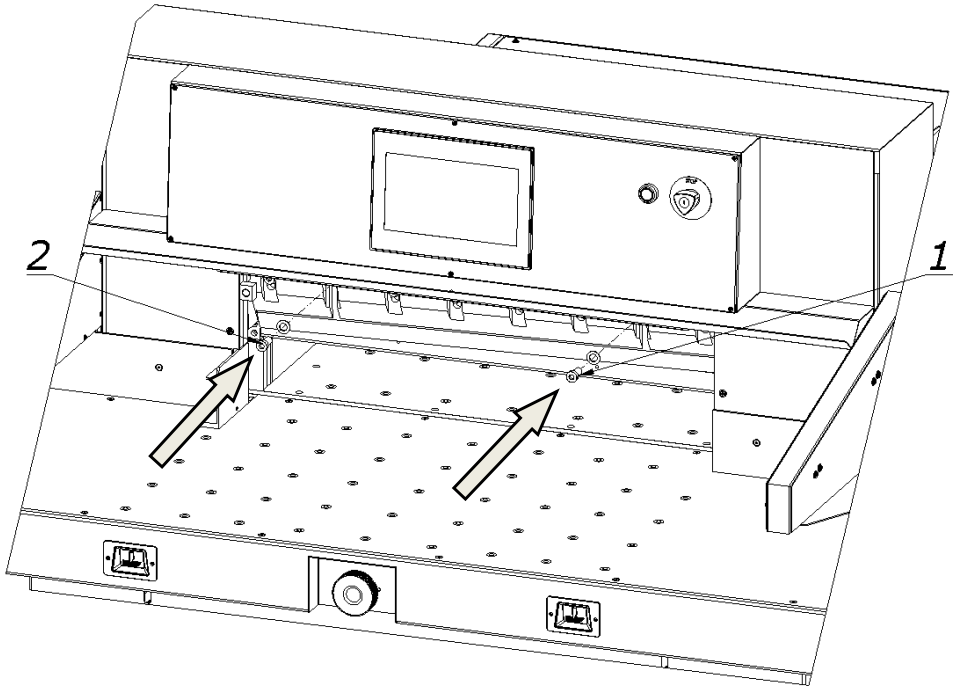


Figure 34.

8. Slightly loosen the first fixing screw 2 on the left side of the knife (Fig. 33), making sure that the screw head does not protrude above the sliding surface of the knife bar.

9. Close knife cover 1 (Fig. 24).

10. Press the “Knife replacement” function on programmer 2 (Fig. 35).

11. Press push buttons 3  simultaneously (Fig. 35) to start the cutting cycle. The knife will stop in the lower position.

12. Open the knife cover

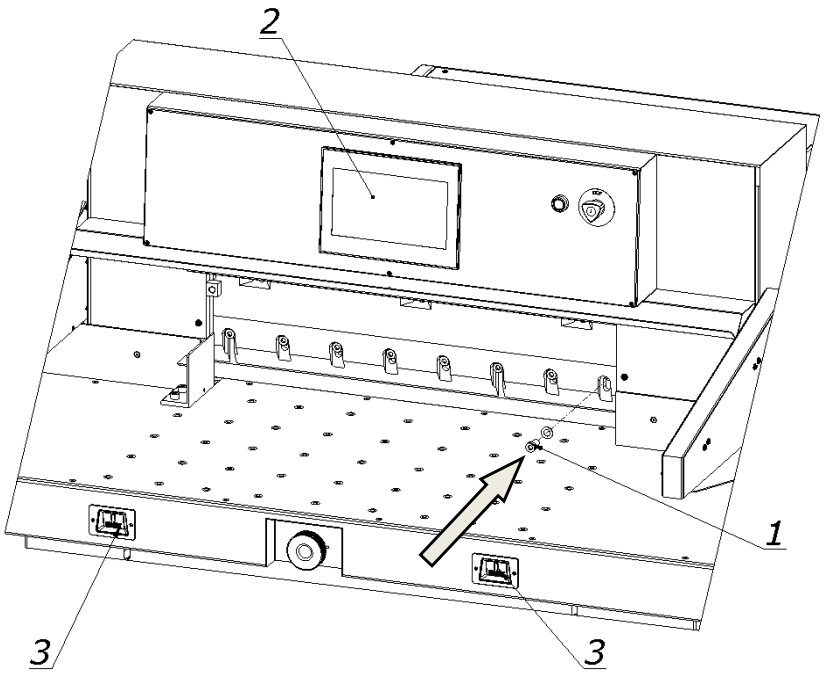


Figure 34.

13. Lightly screw in screw 1 (Fig. 34).
14. Unscrew (loosen) fixing screws 3 (Fig. 35) so that the knife falls under its own weight onto the cutting stick along its entire length.
15. Tighten adjustment screws 4 (Fig. 35) as far as they will go, so that the knife cuts into the cutting stick by approx. 0.3 mm.

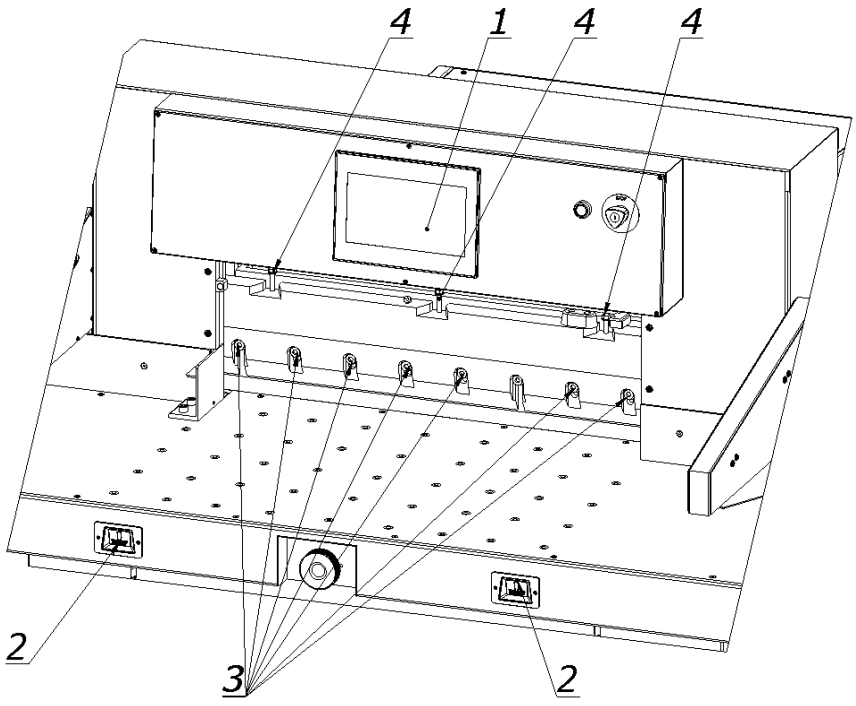


Figure 35.

**WARNING**

**Making cuts that are too deep may shorten the life of the blade**

16. Tighten fixing screws 3 (Figure 35).
17. Close knife cover 1 (Fig. 24).
18. Deactivate the “Knife replacement” function on programmer 1 (Fig. 35).
19. Press push buttons 2 simultaneously.  The knife will return to its upper position.
20. Open knife cover 1 (Fig. 22).
21. **Tighten the first fixing screw on the left side of the knife. 2 (Fig. 33).**
22. Perform the cutting test.

*If the knife does not cut the stack to the last sheet, repeat the steps from point*

## Rotating or replacing the cutting stick

**Danger!**

**Risk of injury!**

The cutting stick has a significant impact on the cutting quality of the bottom sheets of the stack and the rate at which the knife becomes blunt. It is recommended to replace or rotate the cutting stick after each knife replacement or if the bottom sheets are torn (not cut cleanly).

**WARNING**

**The channel between the tables into which the cutting stick is inserted must always be clean and free from paper debris.**

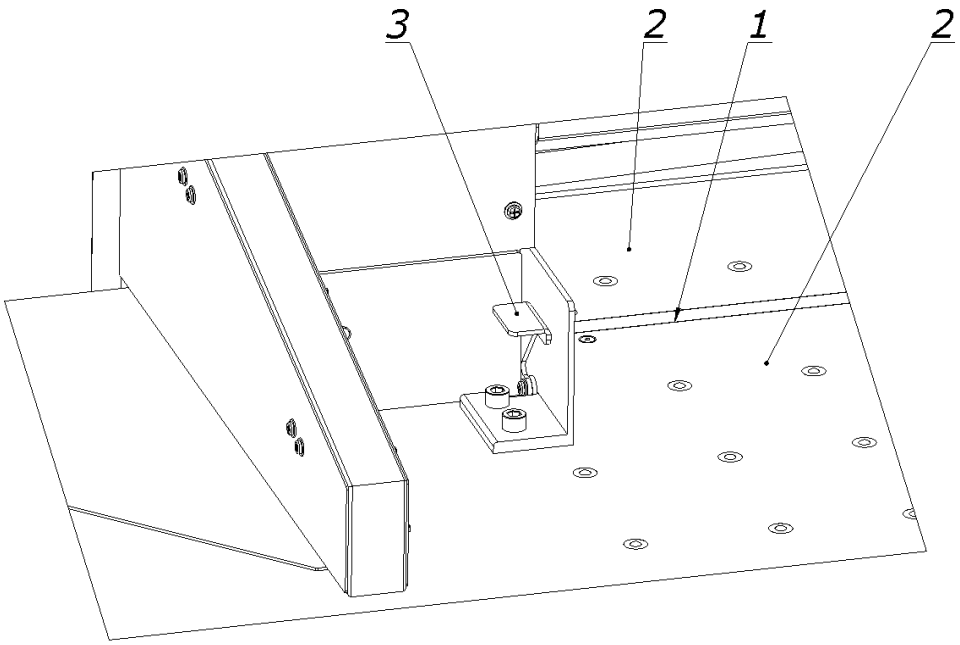


Figure 36. Location of the cutting stick.

1 Cutting stick (Fig. 36).

2 Tables (Fig. 36).

3 Lever for lifting the cutting stick (Fig. 36).

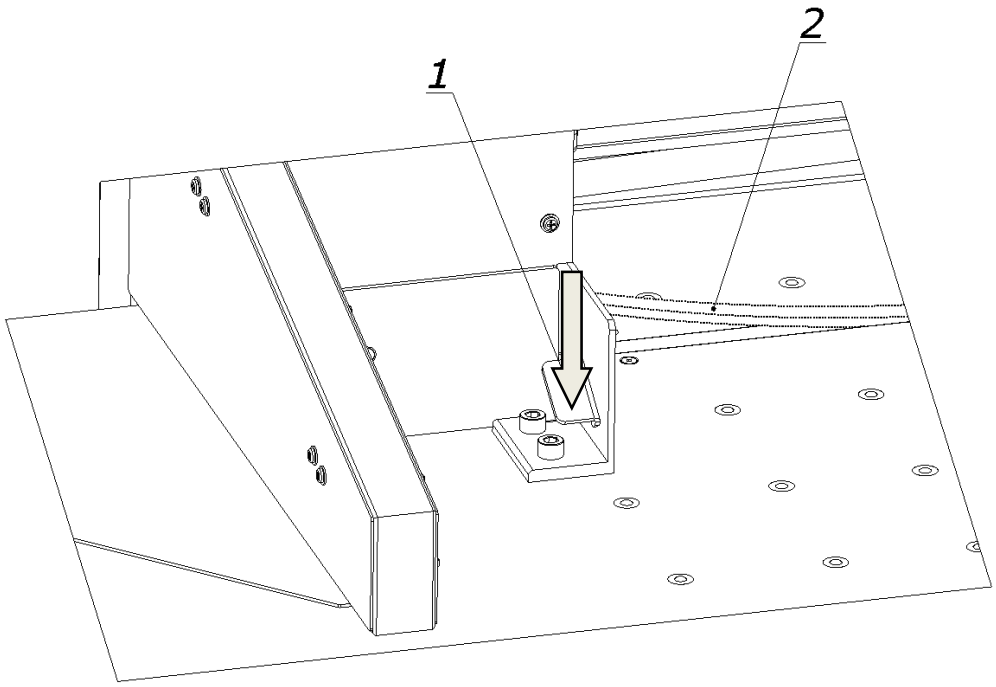


Fig. 37 Cutting stick removal.

1. Press lever 1 and lift cutting stick 2 (Fig. 37).

2. Rotate or replace the cutting stick.

3. Insert the replaced cutting stick 1 into channel 2 between tables 3 and place it on the locking pin 4 (Fig. 38).

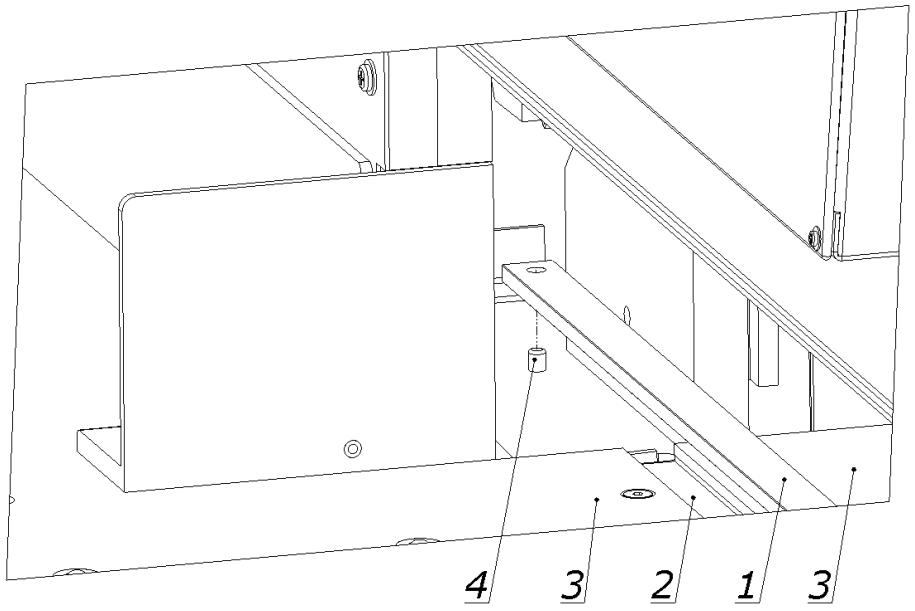


Fig. 38 Mounting the cutting stick.

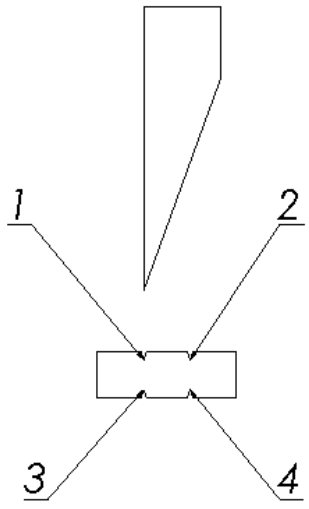


Figure 39. Schematic drawing of the use of the cutting stick.

Rotating the cutting stick in both planes allows for four lines of contact with the knife, marked in Figure 39 as 1, 2, 3, 4.

## False clamp

The use of a false clamp attachment under the main paper clamp prevents marks from the protrusions on the lower part of the bar from appearing on the material to be cut.

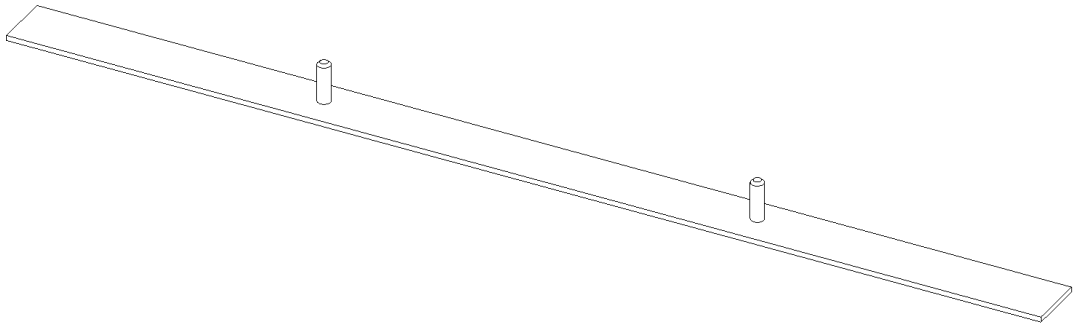

Figure 40. False clamp.

The false clamp (Fig. 40) is mounted under the front table in the location shown in Fig. 41.

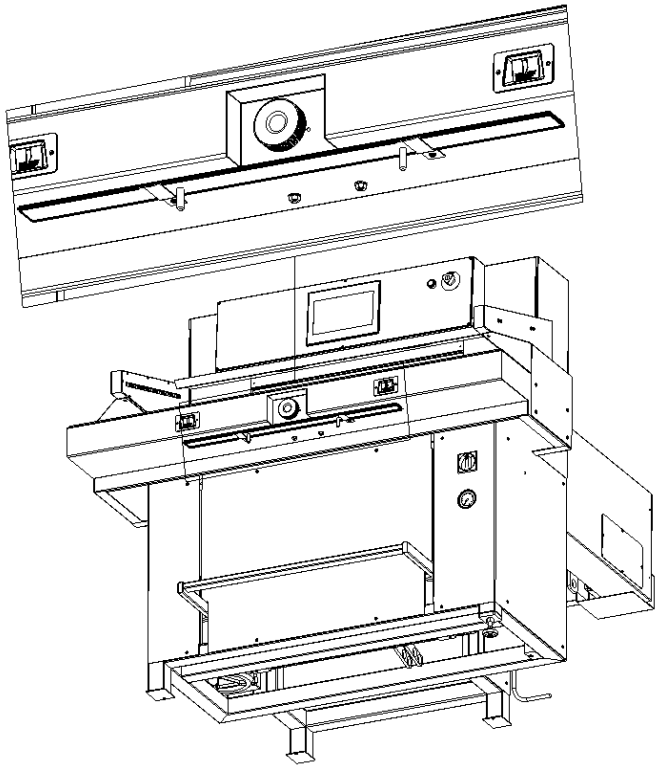

Figure 41. Storage location of the false clamp under the front table.



**Danger!**



**Risk of injury!**

**To install the false clamp:**

1. Place false clamp 1 (Fig. 42) under the main paper clamp so that the insert pins are positioned under the holes in the paper clamp.

2. Press foot pedal 2 (Fig. 42) to lower the paper clamp so that the pins of the false clamp fit into the holes in the bar and the false clamp adheres with its entire surface to the lower surface of the bar.

3. Using a 3 mm hex key, tighten screws 3 (Fig. 42) firmly into the threaded holes in the paper clamp, locking the false clamp in the paper clamp.

4. Release the pressure on the foot pedal 2 (Fig. 42) – the bar with the false clamp attached will return to its upper position.

**When not in use, the false clamp should be mounted under the front table! (Fig. 41)**



**NOTE**

**If the paper clamp false clamp is not placed in its mounting location under the front feed table, the cutter will behave as if it is mounted and the minimum cut available will be greater.**

**Installing the false clamp in the paper clamp results in:**

**the minimum cut length is 50mm (25 mm without the false clamp),**

**the maximum stack height is 96 mm (100 mm without the false clamp).**

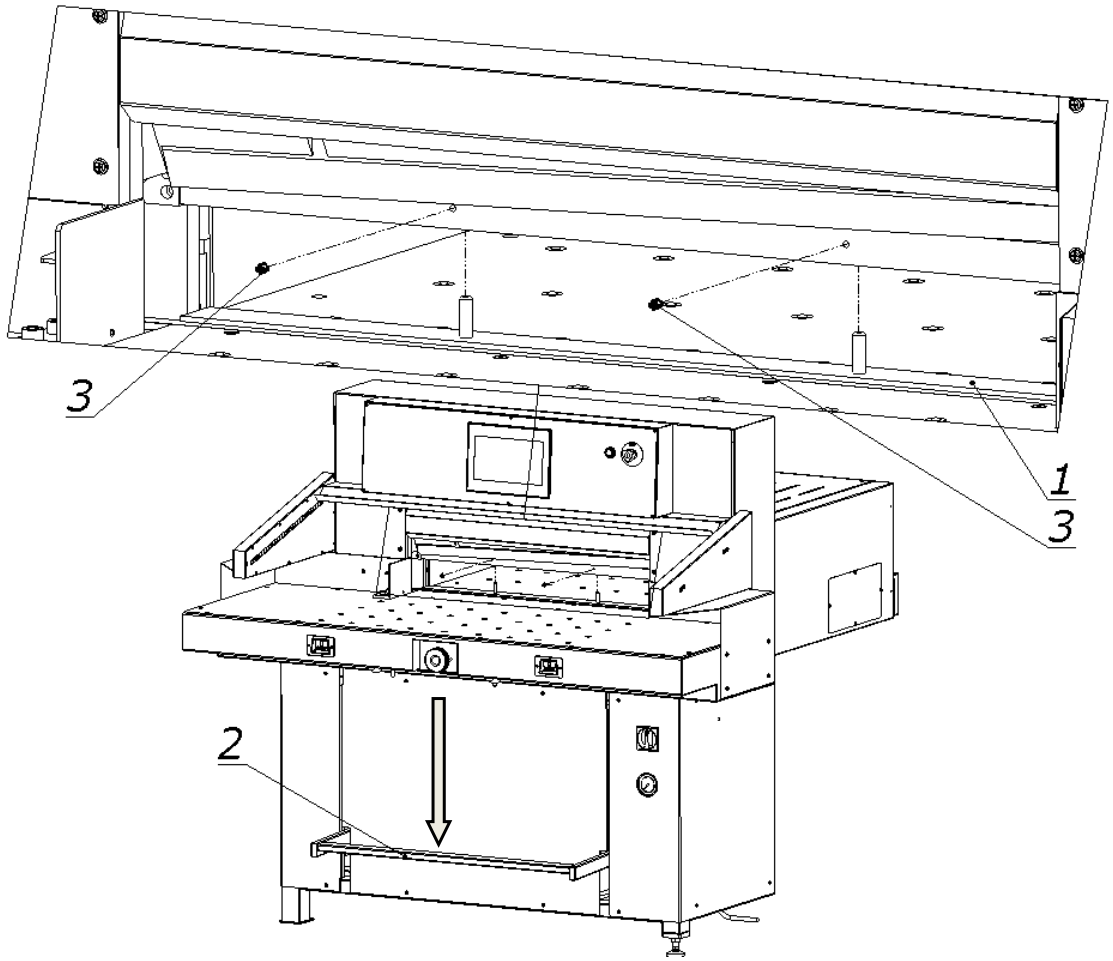


Figure 42. Operating elements used when installing the false clamp in the paper clamp.

## Setting the back gauge

**NOTE**

**The activities described in the chapter may only be performed by trained technicians**

The cutting machine is delivered fully assembled. The cutting angle, parallel cutting and back gauge tilt are factory-set and normally do not require any additional adjustment. However, should the need arise, the procedure is described in this chapter.

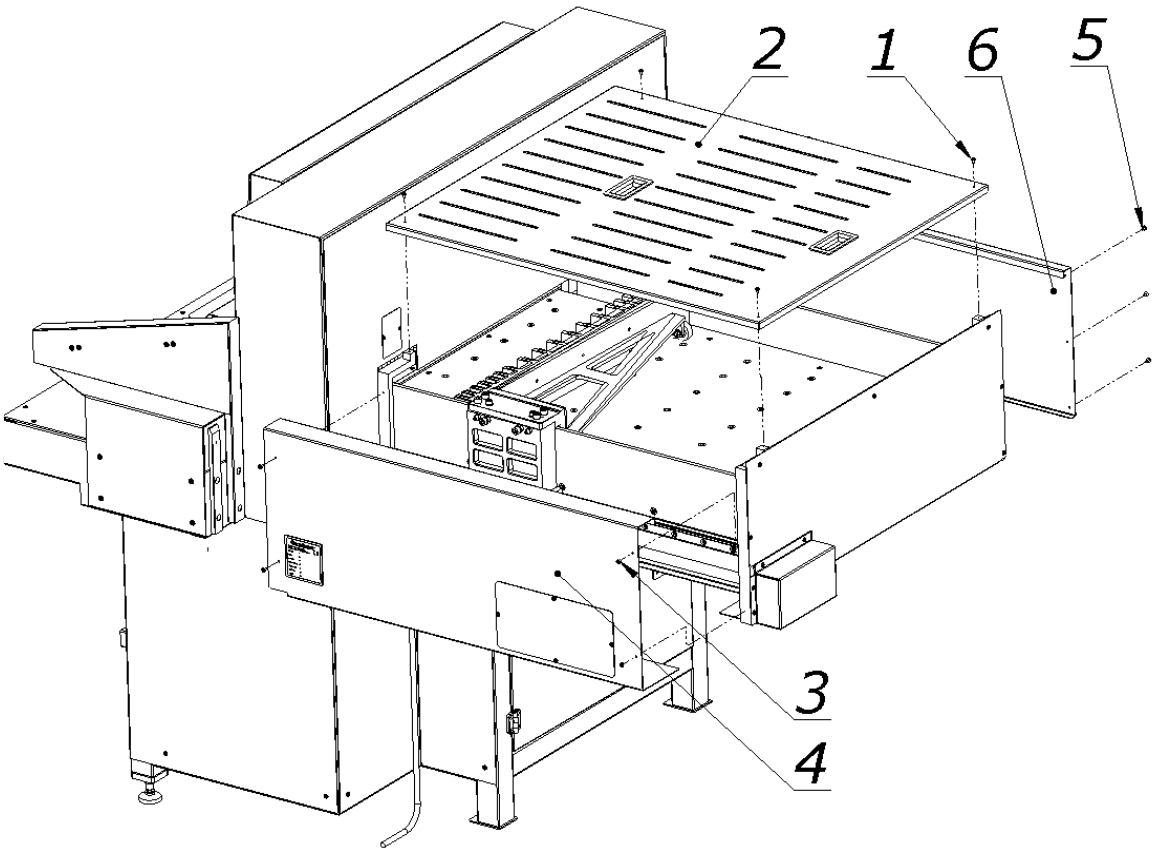


Figure 43 Cover removal

To adjust the back gauge:

1. Remove screws 1
2. Remove cover 2
3. Remove screws 3
4. Remove cover 4
5. Remove screws 5
6. Remove cover 6 (Fig. 43)

## Setting the cutting angle (changing the resistance setting relative to the blade)

The cutting angle is correctly set when resistance 1 is perpendicular (90°) to the cutting line (blade), i.e. the dimensions of the stack on the outer sides are the same (**A = B**) (Fig. 44). If the dimensions differ, adjustment is necessary.

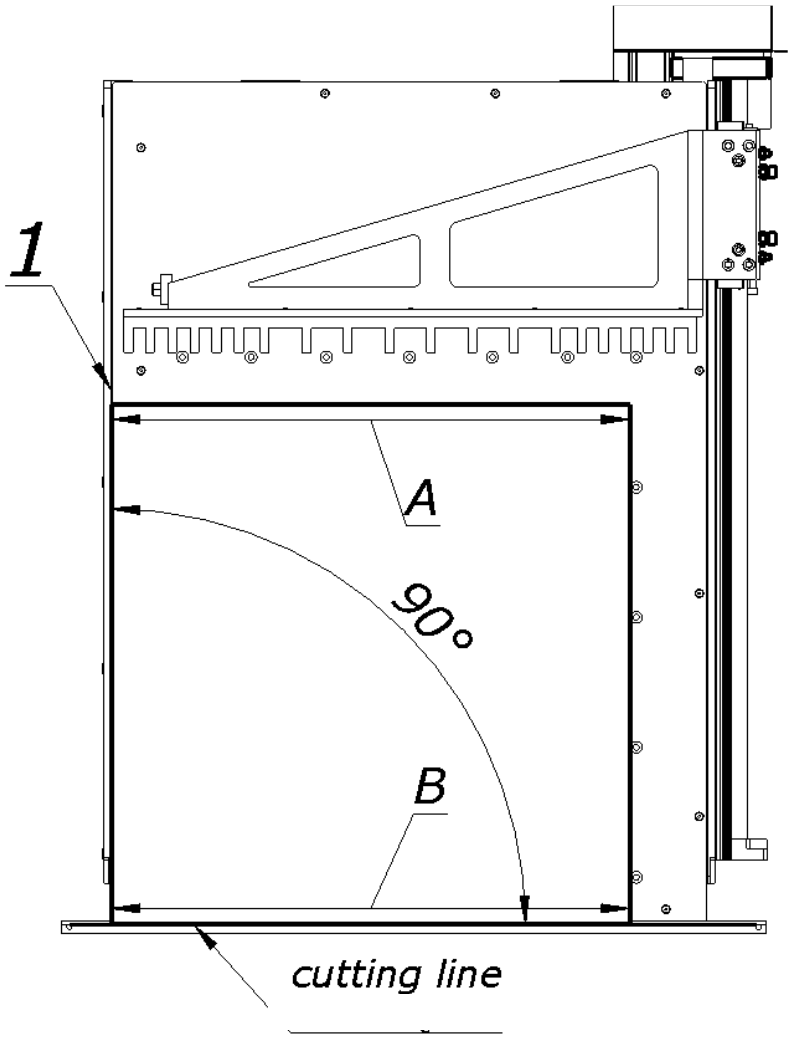


Figure 44

The elements for adjusting the resistance relative to the cutting line (blade) are shown in Fig. 45.

1. Adjustable resistance
2. Resistance fixing screws

Loosen 4 screws 2 (Fig. 45) fixing the resistance 1 and make the adjustment.
Perform a test cut.

To achieve optimum setting accuracy, repeat the adjustment several times. After setting, lock the adjustment screws.

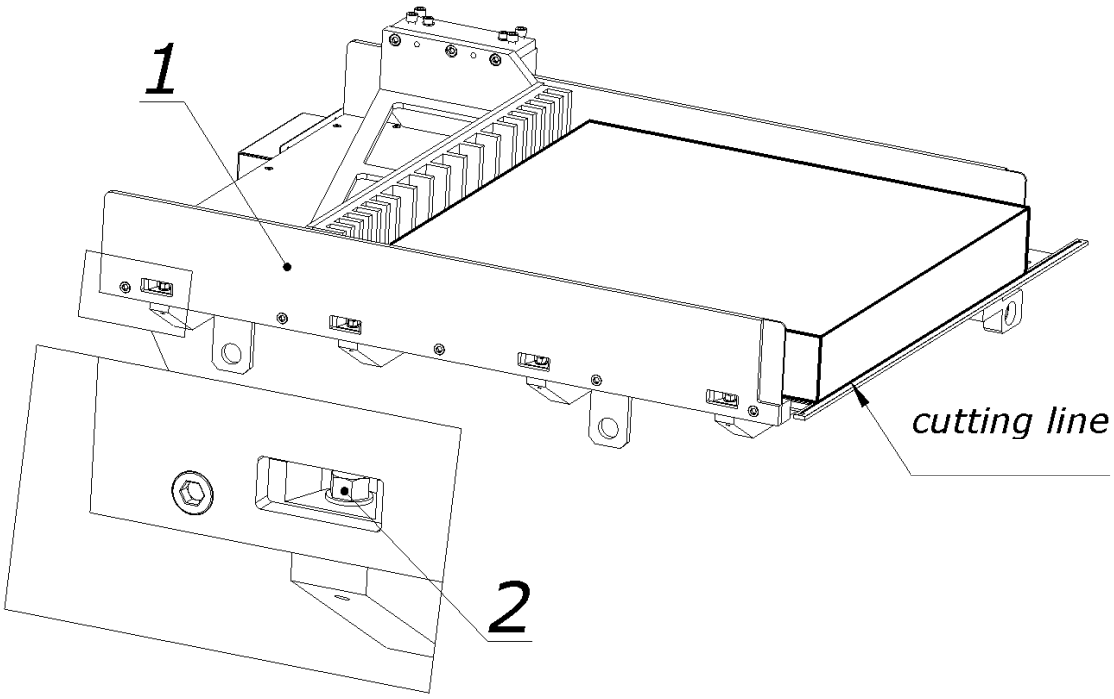


Figure 45. Cutting angle adjustment elements.

## Setting the parallelism of the back gauge (setting the back gauge relative to the blade)

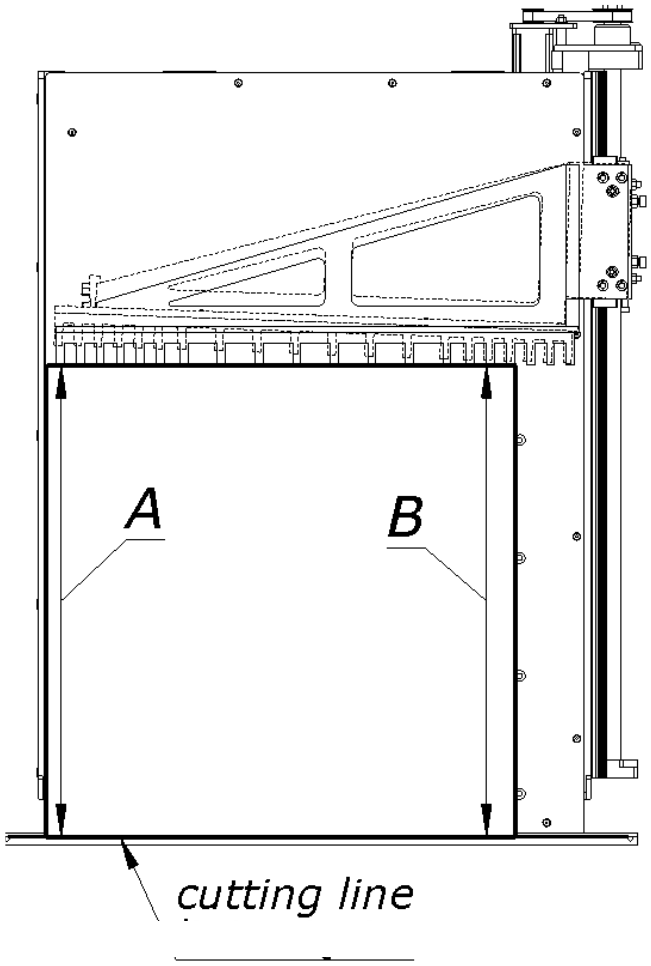


Figure 46.

Correct parallelism is achieved when the stack dimensions on the outer sides are the same **(A = B)** (Fig. 46). If the dimensions differ, adjustment is required.

The adjustment elements of the back gauge are shown in Figure 47.

1. Positioning screws for the back gauge
2. Lock nuts for positioning screws
3. Back gauge fixing screws
4. Lock nuts for fixing screws

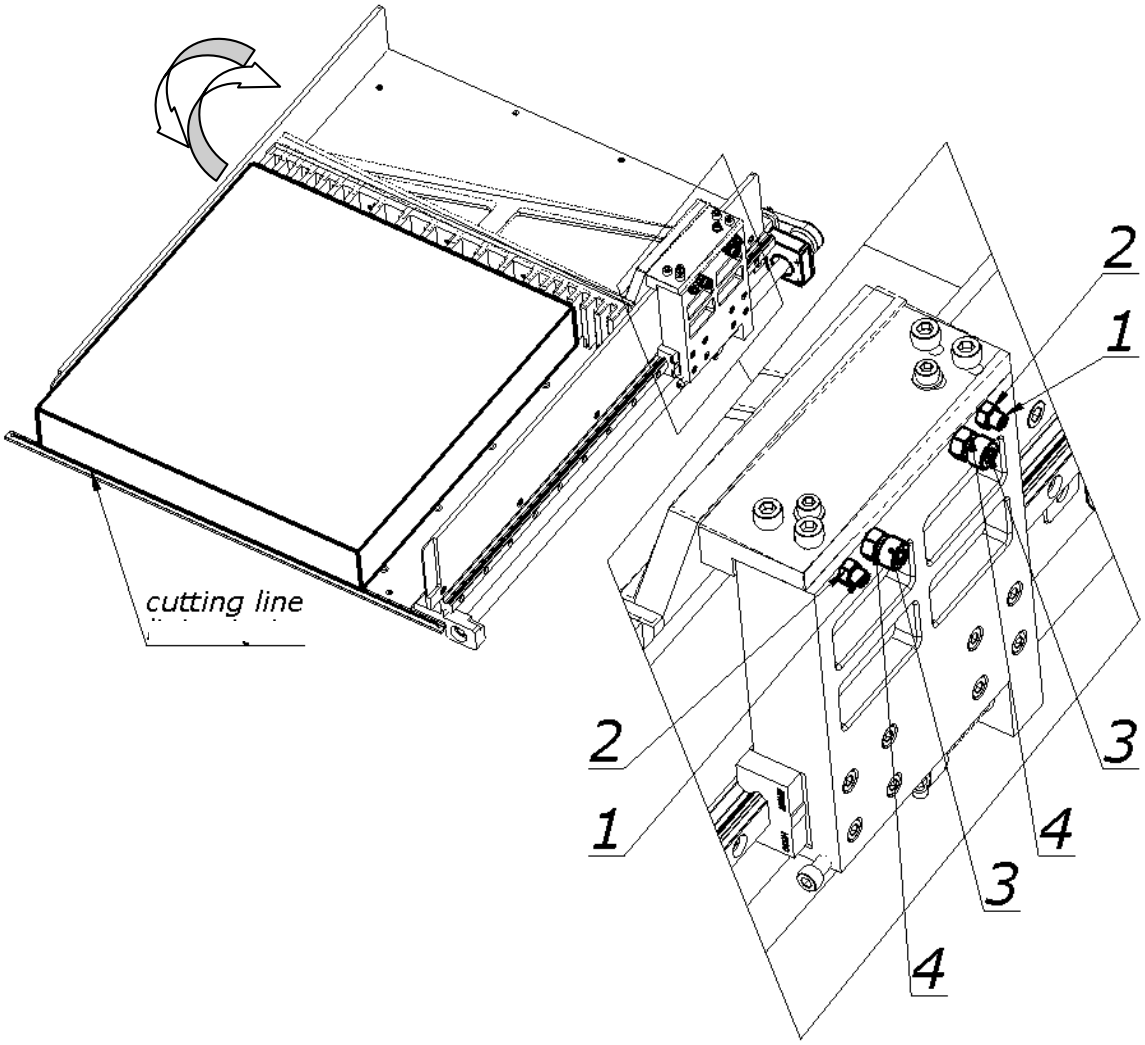


Figure 47. Parallel adjustment elements of the back gauge

To achieve optimum setting accuracy, repeat the adjustment several times. After setting, lock the positioning screws and adjustment screws with locking nuts.

## Setting the back gauge angle

The back gauge angle is to ensure that there are no dimensional differences between the bottom and top sheets for any height of feed material (paper reams).

- if the bottom sheets are longer than the top sheets after cutting, angle x° (Fig. 48) there is an overcut,
- if the bottom sheets are shorter than the top sheets, angle y° (Fig. 48) there is an undercut.

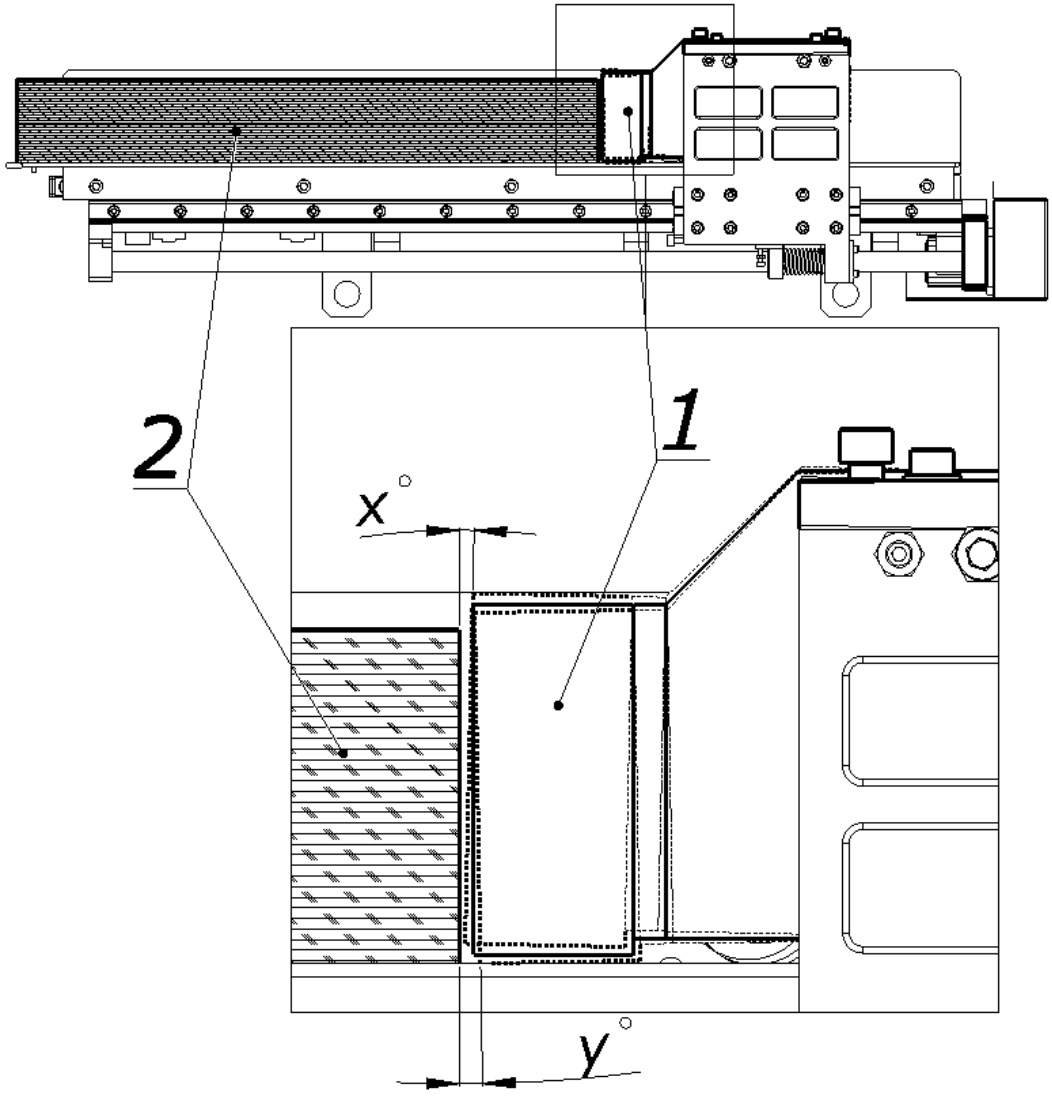


Figure 48.

The elements for adjusting the angle of the back gauge are shown in Figure 49.

1. Adjustment screws
2. Back gauge fixing screws

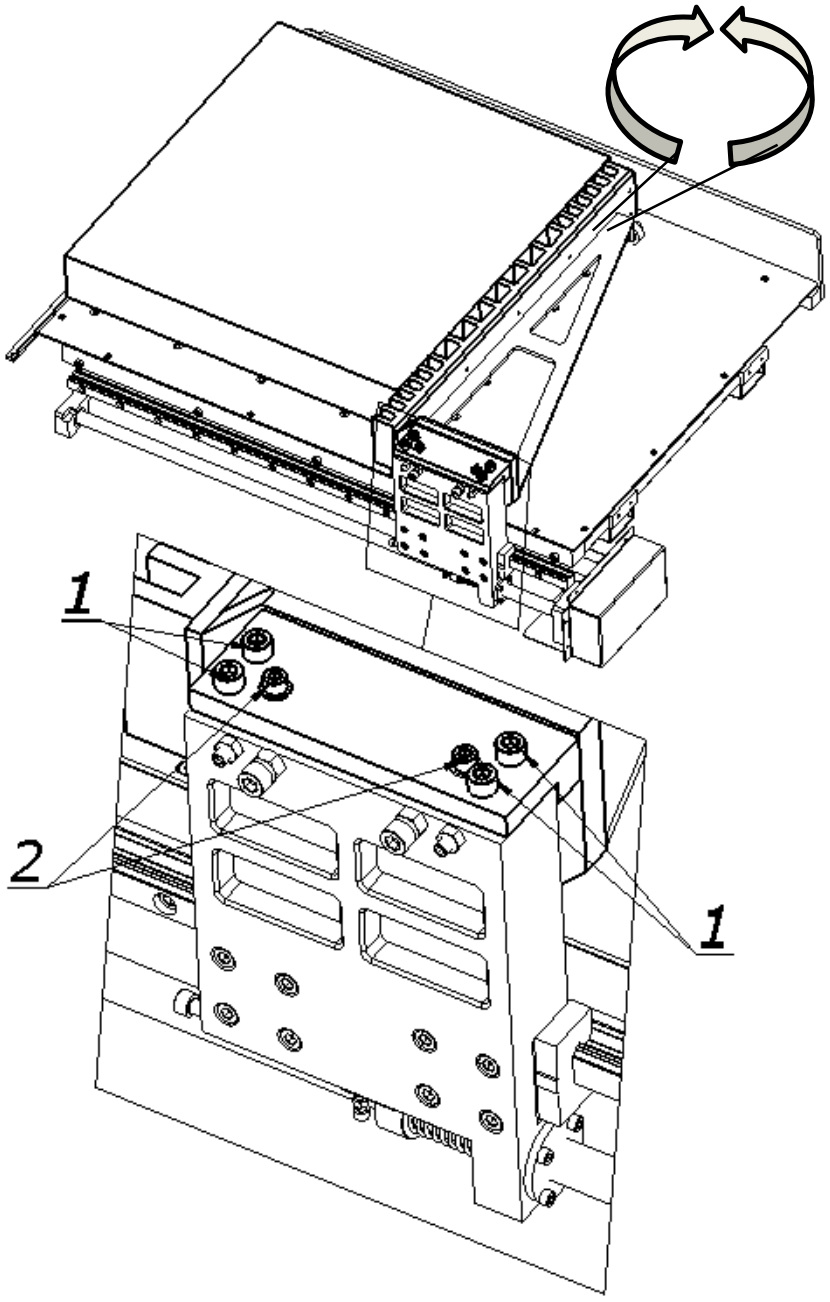


Figure 49.

# SUGGESTED MAINTENANCE



**Danger**

**Maintenance and lubrication must be carried out after the machine is switched off (main switch in “0” position)**

## Daily maintenance

All paper scraps must be removed from the cutting machine and the operator’s working area every day.

## Periodic maintenance

At regular intervals, remove waste and dirt from areas of the machine and its surroundings that are difficult to access.

- Regularly remove paper waste from the openings of the pressure mechanism and knife drive.
- The air intakes to the motors must be kept free of waste and dust.



**Danger!**

**Caution – fire hazard if ventilation is insufficient.**

**The machine covers must be replaced immediately after maintenance works have been completed!**

## Lubrication

The list of lubrication points is shown in Figures 52a, 52b, 53, 54, 55, 56, 57, 58 and described in the table on page 54.

Access to the lubrication points is possible after removing the covers shown in Figures 50 and 51.

When lubricating the knife assembly, use the same operating elements as when replacing the knife (page 29).

When lubricating the feed mechanism, select the ***SERVICE POSITION*** function on the programmer screen and the mechanism will move to service window 3, Fig. 50.

Lubricate the side surfaces of the guides and the surface of the knife body that comes into contact with the guides in the upper (Fig. 46a) and lower positions of the knife body (Fig. 46b). Lubricate the indicated areas on both sides of the cutting machine.

In places requiring lubrication with solid lubricant, apply the lubricant with a grease gun.

NOTE: 2-3 presses of the grease gun trigger are sufficient.

**The indicated places should be lubricated once a week**!

List of lubrication points for cutting machine mechanisms

| Designation | Cutting machine assembly | Type of lubricant | Lubrication point | Figure |
|---|---|---|---|---|
| ○ | Knife assembly | Solid lubricant | • Side surfaces of guides (in contact with the knife body)<br>• Internal surfaces of guides (in contact with rollers)<br>• Side surfaces of the knife body<br>• Mounting of the hydraulic knife actuator<br>• knife pull rod<br>• Knife assembly levers | 52a<br>52b<br>55<br>57<br>56 |
| △ | Feed mechanism | Solid lubricant | • Bearings of the back gauge guide | 58 |
| | | Oil | • Lead screw (apply a thin layer of grease) | 58 |
| 3 | Pressure mechanism | Solid lubricant | • Paper clamp slides<br>• Shaft bearings<br>• Mounting of the hydraulic clamping actuator | 53<br>54<br>55 |

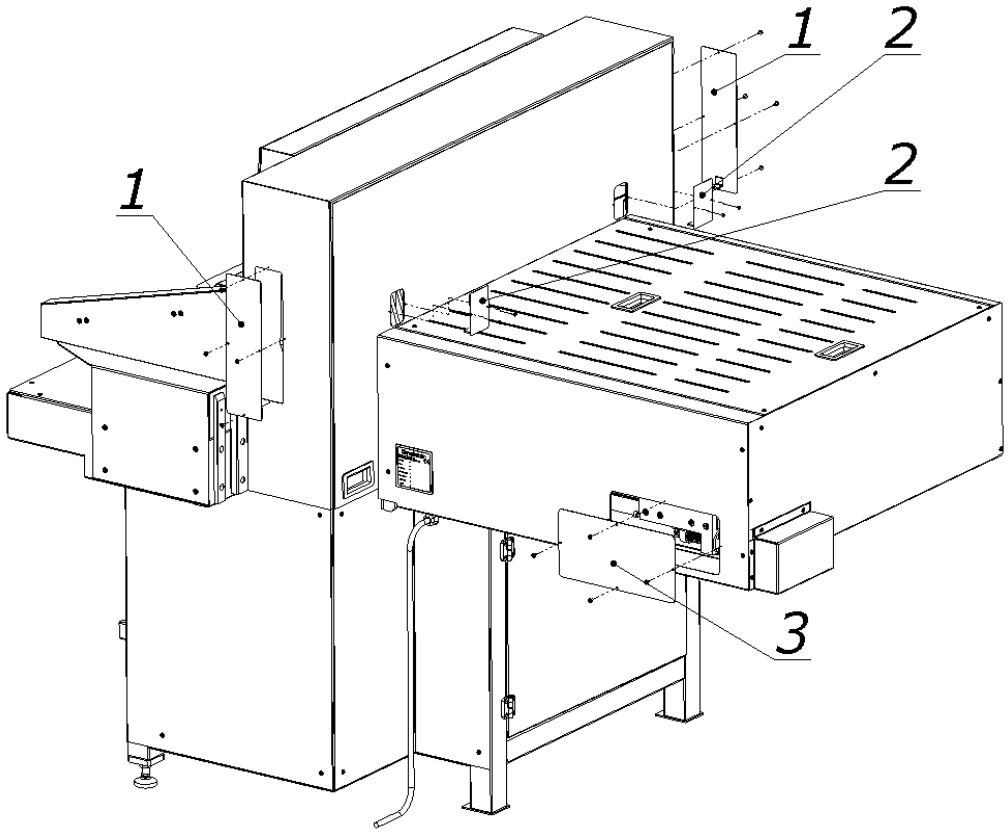


Figure 50. Lubrication point covers for knife bar 1, paper clamp 2, back gauge 3.

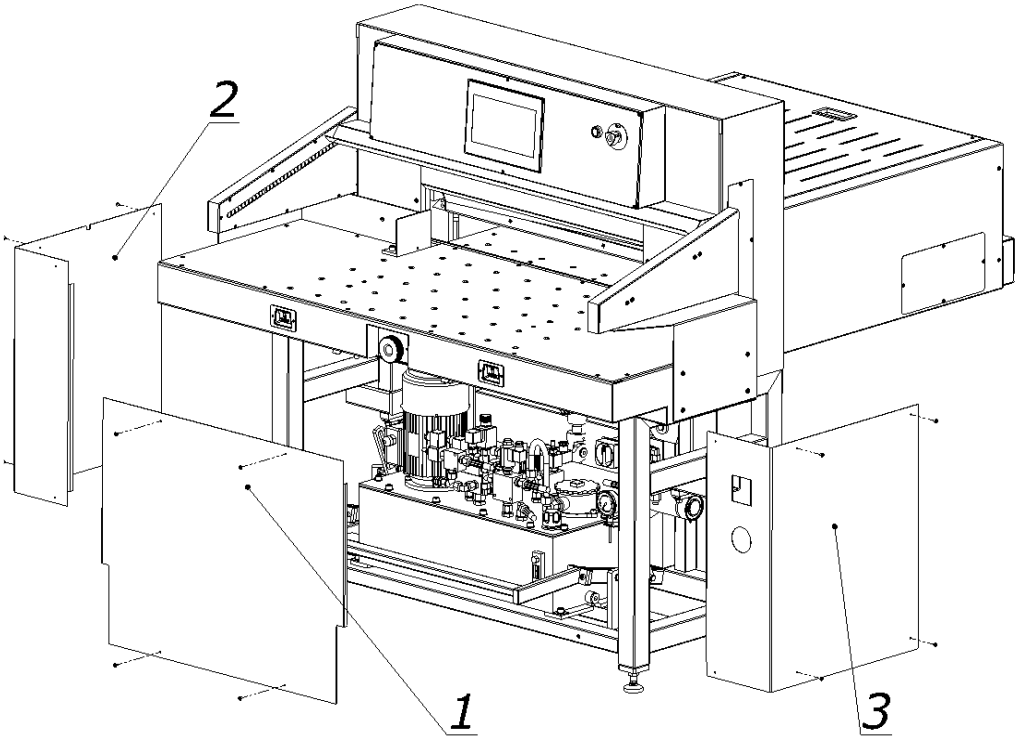


Figure 51. Base covers.

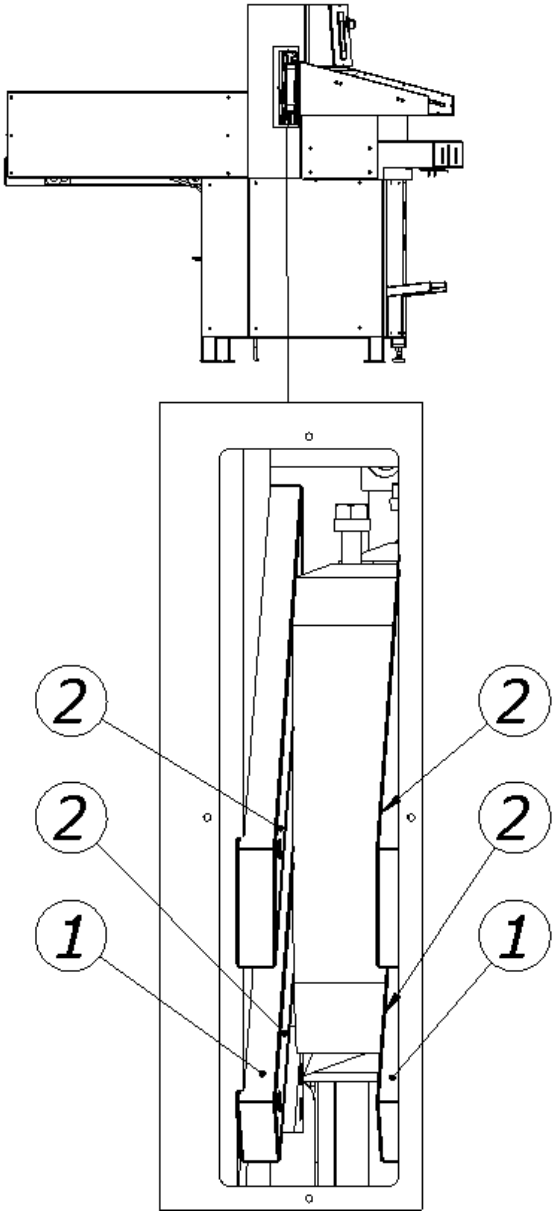


Figure 52a. Lubrication points of the knife assembly in its upper position.

1. Roller rolling surface
2. Knife body slide surface

***Lubricate on both sides***

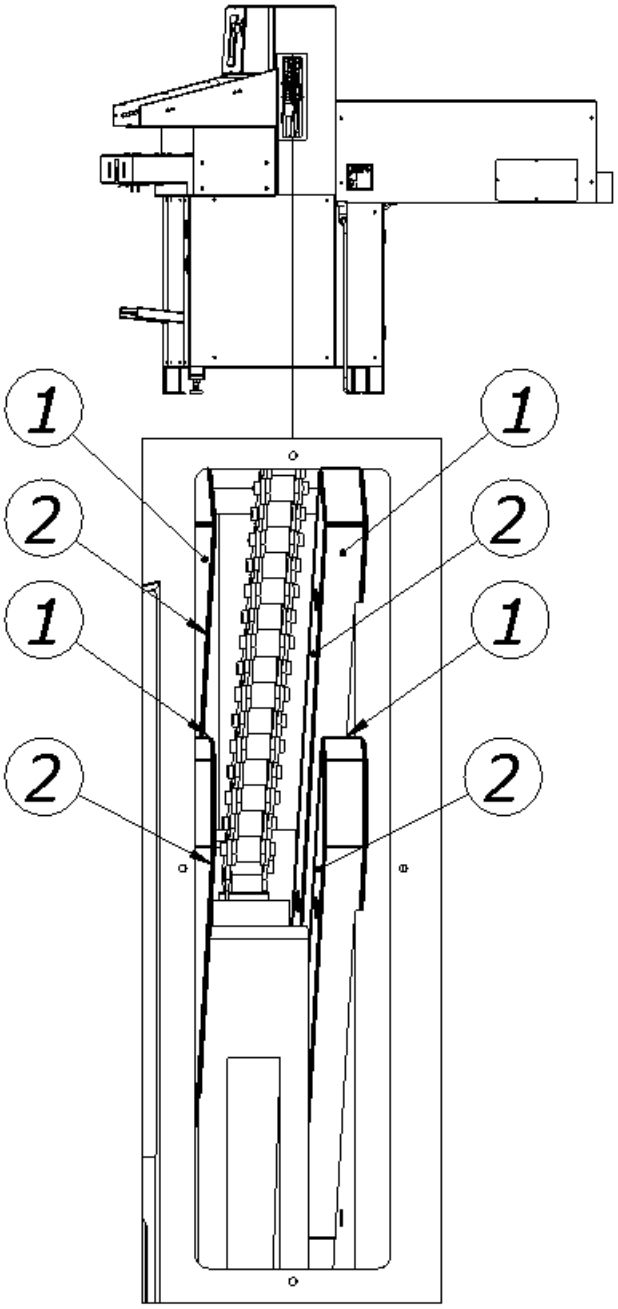


Figure 52b. Lubrication points of the knife assembly in its lower position.

1. Roller rolling surface
2. Knife body slide surface

***Lubricate on both sides***

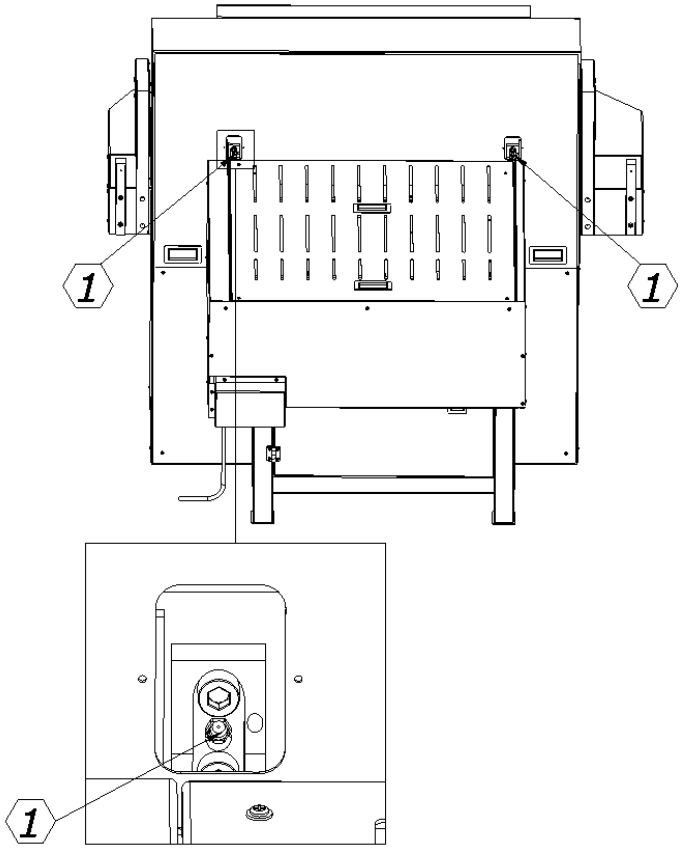


Figure 53. Lubrication points of paper clamp 1.

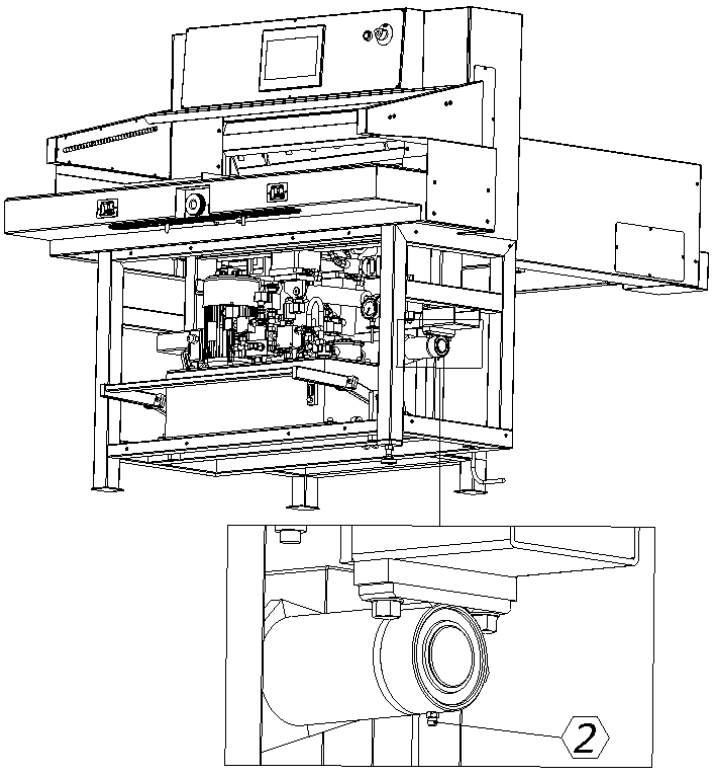


Figure 54. Lubrication point of the paper clamp shaft.

***Lubricate on both sides***

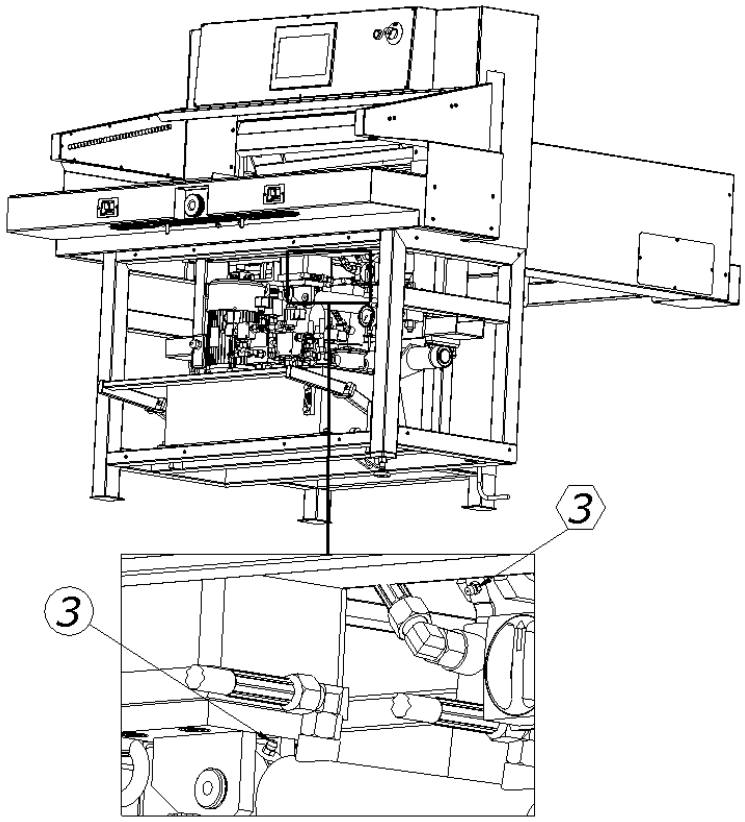


Figure 55. Lubrication point for the knife drive actuator and pressure actuator.

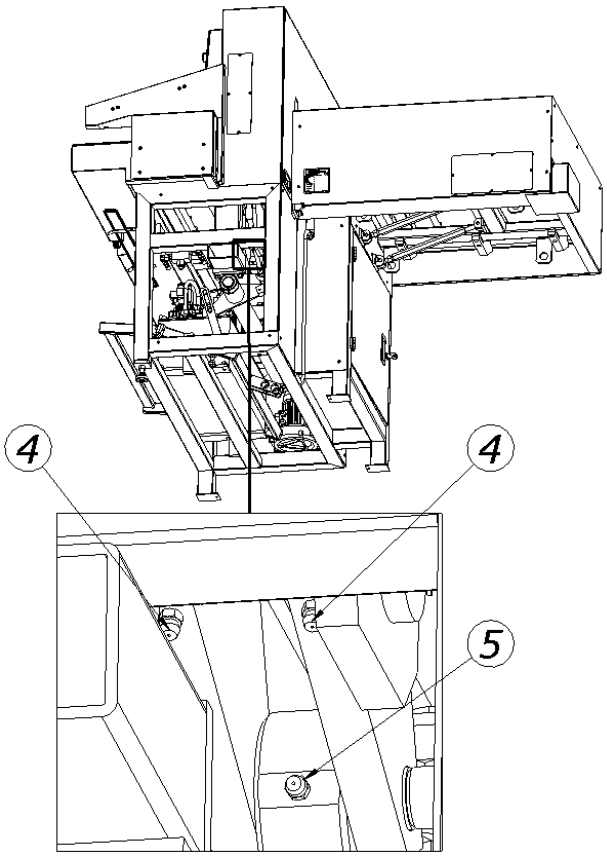


Figure 56. Lubrication point of the knife assembly lever.

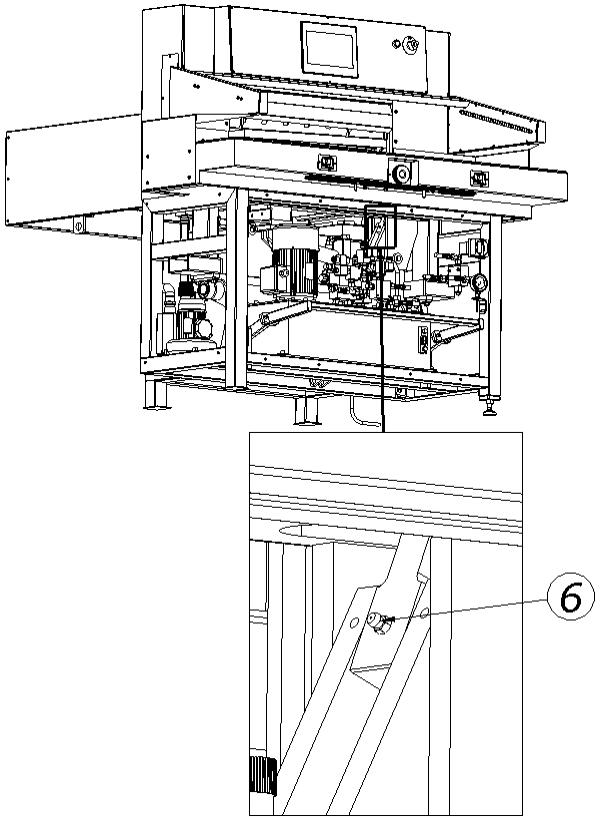


Figure 57. Lubrication point for the knife pull rod assembly lever.

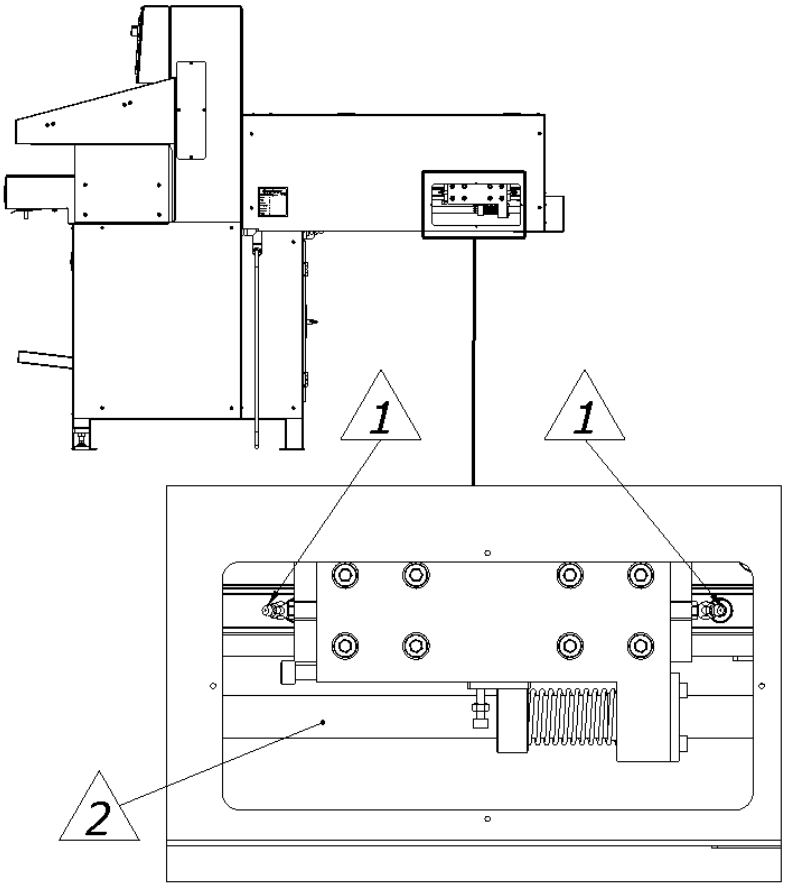


Figure 58. Lubrication point of the feed mechanism

1. Bearings
2. Screw surface

## Hydraulic power pack

The relief valve has been set to a pressure of 110 bar and sealed.

This setting can be checked using a pressure gauge (included with the unit) by connecting it to the pressure gauge connection.

**Unauthorised changes to the pressure setting are not permitted and will void the unit's warranty!**

**Operating conditions**

- ambient temperature of the cutter from 5°C to 30°C,
- HV 46 hydraulic oil,
- dust-free air,
- free air exchange for cooling,
- the temperature of the hydraulic oil must not exceed the value specified by the hydraulic oil manufacturer,

- the cutter is designed for indoor use, protected from environmental influences such as direct exposure to sunlight and precipitation,

- use in accordance with occupational health and safety rules and fire regulations,

- the cutter must be operated by qualified and trained personnel

**Danger!**

**Danger of burns caused by hot oil!**

**Danger of hydraulic oil splashing!**

According to the hydraulic power pack manufacturer's recommendations, the oil in the unit should be replaced after one year of intensive use.

To change the oil, unscrew drain plug 2 (Fig. 59) located at the bottom of the tank.

Drain the old oil while it is still warm.

Pour in fresh oil after screwing in the drain plug 2 through filler hole 1. (Fig. 59)

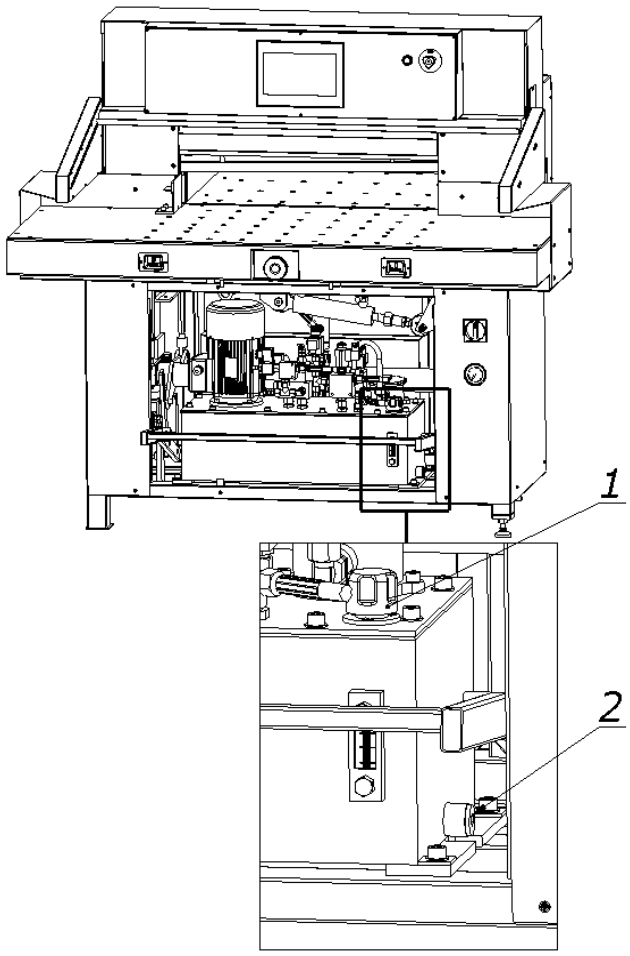


Figure 59. Oil change in the hydraulic power pack.



**Danger!**



**Risk of injury!**

**After lubrication:** Using a cloth, completely remove any excess lubricant (grease, oil) that has leaked out, especially from the surface of the table on which the material to be cut is placed and from the working parts that come into contact with the material being cut, i.e. the knife body and the paper clamp.

## Periodic Checks

### General recommendations

- After each shift, clean the machine (mainly from paper dust).
- Pay attention to the cleanliness of the control element contacts (contactors, switches).

- Check that the screw connections on the cutting machine elements are correct and tighten the screws if necessary.

### Inspection of hydraulic hoses

Regularly check the hose for damage or wear and tear, and check the oil level.

Recommended test criteria for hydraulic hoses:

- Damage to the inner layer (scratches, cuts, cracks)
- Hose deformation
- Leaks (on the hose surface, at the connection)

Hoses should be inspected at least every 12 months.

It is recommended that hoses be replaced at least once every 6 years.

**Blade sharpness**

The quality and accuracy of cutting depend primarily on the sharpness of the knife and the correctly selected angle of its blade.

**Indications of a dull blade**

- rough and uneven surface of the cut stack
- pinching of the edges of the cut material
- inaccurate cutting
- increased formation of paper dust.

# Faults



**Danger!**

- Any defect or malfunction involves the risk of injury to the operator.
- If the cutting machine knife becomes stuck in the material being cut during cutting, do not attempt to pull the material out from under the knife.
- Defects can only be removed by authorised personnel.
- When the defect has been rectified, install all covers and check that the individual device protections are working properly.
- Repairs carried out by untrained technicians shall result in the immediate loss of the warranty for the cutting machine and shall also relieve the manufacturer and supplier of the machine from liability for damage.

## Fault cause determination

It is necessary to determine whether the defect concerns:

- electrical components,
- mechanical components,
- programmer.

## Basic troubleshooting

**Electrical defects:**

- check for the correct direction of engine rotation
- check the fuses in the machine
- measure the voltage
- check that all connectors are securely fastened
- check that there are no malfunctions in other machines in the plant at the same time

**Mechanical defects:**

- carefully examine all moving parts
- check for abnormal noise during operation of the machine
- check the machine for damage, cracks or iron filings

# 11. SERVICE CALLS

In case of problems, please contact your Formax Dealer, or the Formax Technical Services Team at 800-232-5535.